8500 Series

Digital Multimeter

Student Workbook

FLUKE®

Please complete this form and returned it to the instructor as soon as possible.

Student's name:_____

Company Name:_____

Company Address:_____

City/State/Zip:_____

Company Phone:(_____)_____

Electronics training:

College:_____ Date:____

Vocational school:_____ Date:____

Military training:_____ Date:____

Do you have prior experience with Fluke equipment?

_____

_____

_____

_____

Do you have prior experience with this course subject?

_____

_____

_____

_____

When you've filled out the form, give it to your instructor. Thanks.

>forward<

Welcome to the customer service training course for system level digital voltmeters. In this course we'll discuss the 8500, 8502, 8505, and 8506 multimeters.

The majority of the course is in the 'self paced' mode. What that means is that you'll get a chance to have your hands on the 8500 instrument for most of the course. You'll familiarize yourself with the 8500s by analyzing waveforms, operating and programing the instrument, and troubleshooting and calibrating the modules.

All of the instructions you'll need to complete this course is in this workbook in the form of 'units'. There are 22 units in all, divided into six levels. The way the class works is you start with level six and work your way up to level one. There are three or four units per level, any unit within its level can come in any sequence, so you can select your own path of learning.

The next few pages include a list of all the units and their objectives, a course map, a flow chart of how the class works, and lastly a list of classroom rules and regulations. Take some time to read through this introductory information, then go on to level six.

Overall Course Objective:
Given an 8502/8505/8506 DMM, standard tool kit, test equipment, and at least one symptom from the list of common malfunctions, return the system to normal operation. The system must operate within user's required specifications; no cosmetic or structural damage to the instrument; no more than one unnecessary spare was used/ordered; no personal injuries.

* * * * * * Level 1: Unit Objectives * * * * * *

1.1 Given a malfunctioning 8500, isolate the faulty module and order a replacement from the fluke Modular Exchange Center by being fully prepared with all the necessary MEC details.

1.2 Given a malfunctioning 8500, determine whether the controller card is operational using the 9010 microsystem troubleshooter.

1.3 Given a verbal description of a typical 8500 malfunction, determine the malfunction and fix by interviewing the operator.

1.4 Given a malfunctioning 8500, isolate the faulty module using the modified troubleshooting tree from the manual.

1.5 Given a malfunctioning 8500, isolate the faulty module by using technical assistance from a fluke representative.

* * * * * * Level 2: Unit Objectives * * * * * *

2.1 Given a functioning 8506 and manual, demonstrate how to calibrate the tttrms module.

2.2 Given an 8500, 1720 and diagnostic software, program and take readings from the 8500 in the remote mode.

2.3 Given an 8500 and manual, demonstrate how to execute any given performance test for any module.

2.4 Given an 8500 and manual, locate and take measurements from any point within the instrument using a scope and/or dvm.

* * * * * * Level 3: Unit Objectives * * * * * *

3.1 Given the 8500 manual set, demonstrate how to execute a dc, ohms, and current calibration on an 8502, 8505, and 8506.

3.2 Given the 8500 manual set, demonstrate how to execute a software calibration on an 8502, 8505, and 8506.

3.3 From memory, draw the analog and digital signal flow for the 8502, 8505, and 8506 meters.

3.4 From memory, recall seven of the top ten failures and seven of the top ten quick fixes/checks.

3.5 Given an 8500 and manual, program any function into the 8500 from the front panel.

* * * * * * Level 4: Unit Objectives * * * * * *

4.1 Given an 8500 and manual, demonstrate any of the three main preventive maintenance jobs.

4.2 Given an 8506 and manual, configure the instrument for any range and function and take readings.

4.3 Given an 8502 and manual, configure the instrument for any range and function and take readings.

4.4 Given an 8505 and manual, configure the instrument for any range and function and take readings.

* * * * * * Level 5: Unit Objectives * * * * * *

5.1 Given an 8500, disassemble and reassemble the instrument and any module; remove any component, and locate and order the appropriate replacement part.

5.2 Given an 8500, identify any external part including front panel switch groups, front/rear terminals, fuses and line power connections.

5.3 Given an 8500 manual set, determine the specified tolerance for any range and function; determine the overvoltage/overcurrent rating for any function.

* * * * * * Level 6: Unit Objectives * * * * * *

6.1 Given the 8500 manual set and list of reference material, locate information within any one of the 45 main topics within fifteen seconds.

* Trainees are expected to study and practice each unit until they can perform as desired, moving up the map one level at a time, from level six to one.

* Trainees may demonstrate their competence on any instructional unit by taking the unit test when they feel ready.

* Trainees may challenge the unit tests without study if, after reading the unit objective, they are confident of their ability.

* Each student must demonstrate competence on one instructional unit before proceding to another, (one on one test).

* Students will practice the exercises in pairs but will be expected to perform individulally.

* The classroom will be open from 7:30 to 5:30 with one lunch break from noon to one. Students may take breaks at any time.

* Unit sign-ups are first in/first out, however the trainee must complete all required prerequisites before adding his name to the list.

* If you need assistance or are ready for a one on one test, check the blackboard for the 'Priority Interrupt Encoder' list. If the list is empty and the instructor is just standing around with his hands in his pockets, go ahead and grab him. Otherwise, if he looks busy, add you name to the interrupt list and he'll service your request as soon as possible.

Classroom Procedure

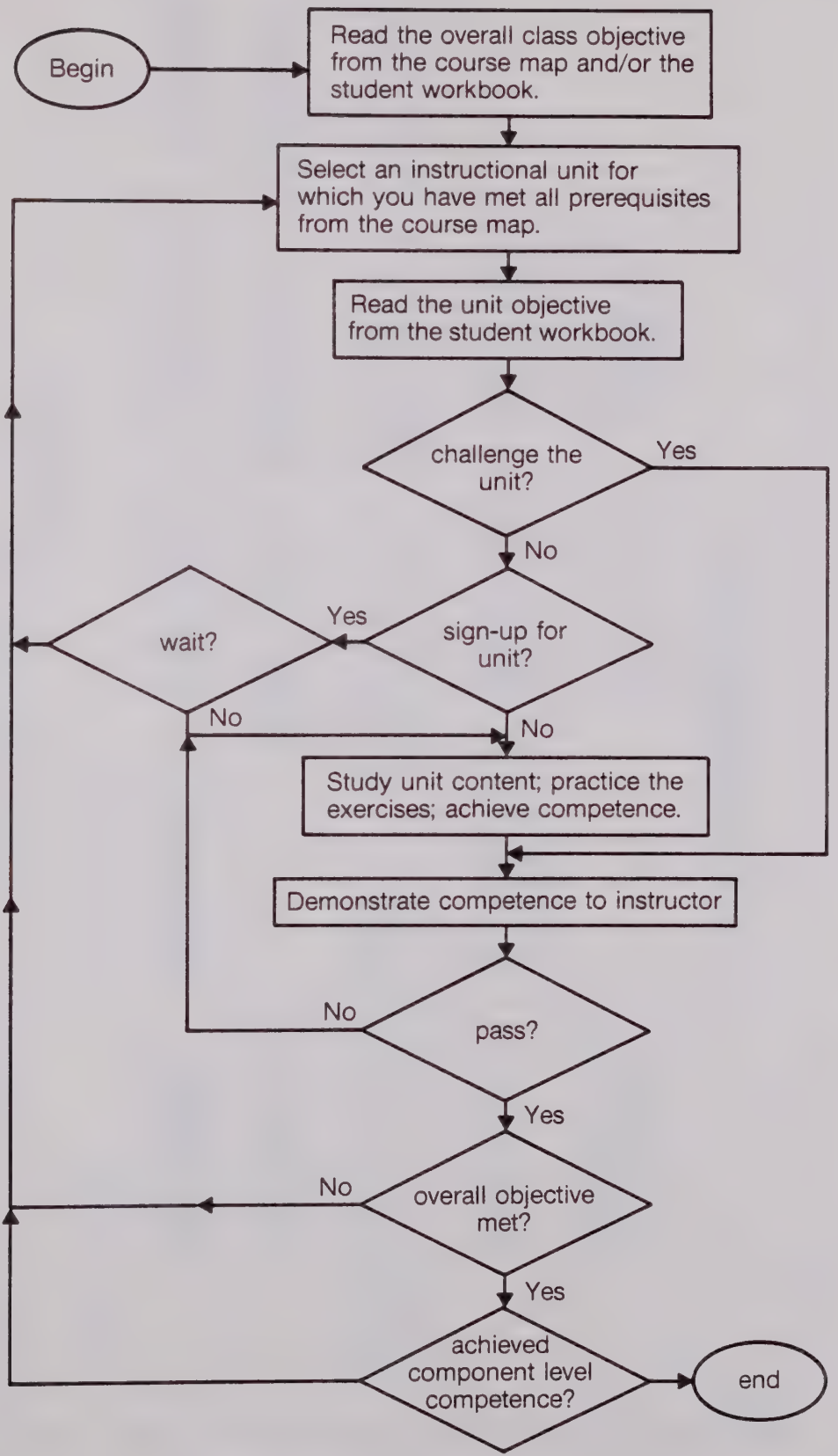

COURSE MAP

CLEAR FAILURE

LOCATE FAILURE

1

Unit objective: #1.1 Troubleshooting
Given a malfunctioning 8500, isolate the faulty module and order a replacement from the Fluke Modular Exchange Center by being fully prepared with all the necessary MEC details.

Unit objective: #1.2 Troubleshooting
Given a malfunctioning 8500, determine whether the controller card is operational using the 9010 Micro-System Troubleshooter.

Unit objective: #1.3 Troubleshooting
Given a verbal description of a typical 8500 malfunction, determine the malfunction and fix by interviewing the operator.

Unit objective: #1.4 Troubleshooting
Given a malfunctioning 8500, isolate the faulty module using the modified troubleshooting tree from the manual.

Unit objective: #1.5 Troubleshooting
Given a malfunctioning 8500, isolate the faulty module by using technical assistance from a Fluke representative.

2

Unit objective: #2.1 Calibration of the 8506's ttrms
Given a functioning 8506 and manual, demonstrate how to calibrate the ttrms module.

Unit objective: #2.2 Remote programming and diagnostics
Given an 8500, 1720 and diagnostic software, program and take readings from the 8500 in the remote mode.

Unit objective: #2.3 Performance tests
Given an 8500 and manual, execute any given performance test for any module.

Unit objective: #2.4 Waveform analysis
Given an 8500 and manual, locate and take measurements from any point within the instrument using a scope and/or dvm.

3

Unit objective: #3.1 Hardware calibration
Given the 8500 manual set, demonstrate how to execute a hardware calibration on an 8502, 8505, and 8506.

Unit objective: #3.2 Software calibration
Given the 8500 manual set, demonstrate how to execute a software calibration on an 8502, 8505, and 8506.

Unit objective: #3.3 Theory of operation/electronic analysis
From memory, draw the analog and digital signal flow for the 8502, 8505, and 8506 meters.

Unit objective: #3.4 Top ten failures and fixes
From memory, recall seven of the top ten failures and seven of the top ten quick fixes/checks.

Unit objective: #3.5 Advanced operation of the 8500
Given an 8500 and manual, program any function into the 8500 from the front panel.

4

Unit objective: #4.1 Preventive maintenance
Given an 8500 and manual, demonstrate any of the three main preventive maintenance jobs.

Unit objective: #4.2 Basic operation of the 8506
Given an 8506 and manual, configure the instrument for any range/function from the front panel and take measurements.

Unit objective: #4.3 Basic operation of the 8502
Given an 8502 and manual, configure the instrument for any range/function from the front panel and take measurements.

Unit objective: #4.4 Basic operation of the 8505
Given an 8505 and manual, configure the instrument for any range/function from the front panel and take measurements.

5

Unit Objective: #5.1 Replacing the bad part
Given an 8500, disassemble and reassemble the instrument and any module; remove any component, and locate and order the appropriate replacement part.

Unit objective: #5.2 Identifying external parts
Given an 8500, identify any external part including front panel switch groups, front/rear terminals, fuses and line power connections.

Unit objective: #5.3 Determining specs, ratings, and tolerances
Given an 8500 manual set, determine the specified tolerance for any range and function; determine the overvoltage/ overcurrent rating for any function.

6

START HERE

Unit objective: #6.1 Orientation
Given the 8500 manual set and list of reference material, locate information within any one of the 45 main topics in at least fifteen seconds.

Unit objective #6.1: Orientation.
Given the 8500 manual set and list of reference material, locate information within any of the 45 main topics in at least fifteen seconds.

Introduction.

This is the first of twenty two units designed to mold you into an expert 8500 technician. What you will learn in this unit will be used throughout the course, and on the job. The unit begins by explaining the manuals for the 8502, 8505, and 8506. You'll find out how the manual is organized and how to quickly locate information. You'll also learn what is not in the manuals so you won't waste time searching for information that isn't there.

As always, the unit has an exercise. This exercise is easy. It's simply a matter of indexing and personalizing your documentation with the use of notebook dividers. But don't underestimate the importance of this easy exercise. A few minutes spent now will save you hours of frustration trying to find needed information - especially when the pressure is on, like when the boss is watching.

That's the main theme of this course. Providing the skills needed to get the job done as quickly and efficiently as possible. What you will learn in the next four or five days will provide tools and time proven skills that normally take months of on the job experience to acquire. The common sense stuff. The stuff that experienced 8500 techs just take for granted because they've been working on these instruments for so long, that they just 'seem to know' what to do to get a broken meter to work again. The common failures. The quick fixes. Practical knowledge you can't find in a text book or operator's manual. The 'easy to learn' but 'valuable to know' secrets that all 8500 experts know and take for granted.

Finally, we'll end the unit with a practice test. When you feel confident of your ability, notify the instructor. He will give you a one on one performance test qualifying you to go on to the next instructional unit. Since there is only one unit in level six, you will also graduate to the next higher level on the course objective map. Level five offers a choice of three instructional units. Review the objectives for all three and choose one unit to start with. Choose the one that interests you the most, or that seems the easiest to conquer, or possibly the one that seems most challenging. The choice is completely yours. But now, let's get started with the first unit - the 8500 manual set.

The 8500 Manual Set.

The manuals for the 8500 meters contain information required for proper care and feeding of the instruments. The manuals are divided into sections covering specifications, operation, theories, maintenance, part numbers, schematics and assembly drawings. As you can tell by this list of major topics, there is alot of information. All essential information, but not always in the right order.

Expert 8500 techs know what's in the manuals almost intuitively. They know where to look to find a particular schematic, part number, spec, or maybe even an operating note that they need brushing up on. They have the 'on the job advantage' of being able to locate information quickly, without wasting time.

How you use the manual in this training course, and on the job is up to you, but one thing is certain. The tech who can locate the information he needs quickly, without wasting valuable time is well on his way to being regarded as the '8500 expert'. So with this objective in mind, let's go on to the exercise.

The exercise.

As I said earlier, the exercise is simple. Just three steps. First, locate a section in the manual. Second, read the section's explanation from the workbook. And third, 'customize' your manual by inserting ringbook indexes at key points.

You'll start at the front of the manual and work to the end. I'll briefly explain differences between the three manuals so you can customize all three at the same time. Then, when you've found out what 'is' in the manual I'll tell you what isn't and where you can go to find that extra information.

Change/Errata Information.

Any of the three manuals may contain yellow change/errata sheets at the front. After you've customized your manuals read through the changes to get a general idea of what they are. Since you want to be able to repair any 8500, no matter what rev level, remember to check it against the instrument you're repairing before you order parts.

Section 1: Introduction and Specifications.

The first section in the 8502 instruction manual briefly describes the instrument and it's options, then details the instrument's specifications. The description you may read once or twice, but the specifications you will use again and again.

A common operator error is misunderstanding accuracy specs and maximum ratings, so you'll want to be able to find this information quickly. Take a few minutes to read the description (1-3) and look at the specifications. When you get to table 1-3, locate the warm-up time, overload ratings, and accuracy specs for dc volts. These are the most frequently used numbers.

When you've examined the entire section insert a ringbook index and mark the label with a term that's significant to you. For example, since the important information in section 1 is really the specs, how about labeling section 1 as 'SPECS', or 'ACCURACY', or 'RATINGS'. The label is for your benefit so use whatever term you think is appropriate. Remember to do all three manuals.

Section 2: Operating Instructions.

The second section in the 8500 manual set deals with set-up and operation. The set-up portion explains how to plug the instrument in and how to use the front panel input terminals. There is also a good explanation of 'guarding' techniques. The discussion on operation of the standard multimeter explains the front panel control buttons, (range and function etc.) and programming abilities, (limits, peaks, offsets, etc.)

Section 2 varies between the three manuals, especially for the

8506, but the main idea is the same, how to operate the multimeter. Briefly look through section 2 in all three manuals, then insert a ringbook index and select a good descriptor. I call it 'OPERATION'. Pretty clever, huh?

Section 3: Theory of Operation.

This section is a overview of how the multimeter is structured electronically. Luckily, it's not your only reference. The standard modules are discussed, and most of the information is correct but some theories are outdated do to rev level changes.

It's a good idea to flip through the pages of this section and inspect the block diagrams, but don't let what's there intimidate you. The circuitry for the 8500 is easy to understand when taken in small bits. That's why the 'detailed theory' section of this workbook was created. Those of you who wish to analyze the circuitry to the component level will get your chance - let's learn how to fix the box first.

Once you've skimmed section 3, insert another 'labeled' index and we'll go on.

Section 4: Maintenance.

Section 4 contains 'performance test' and 'calibration procedures' for the standard instrument. It also lists the instrumentation necessary for testing and calibrating the voltmeter. At the end of the section are some useful troubleshooting notes and charts.

You'll probably use the calibration portion of this section the most, but 'MAINTENANCE' isn't a bad descriptor. Insert an index and call it what you like.

Section 5: Replacement Parts.

All those numbers! It's a good thing you don't have to memorize them. This section lists most of the parts that go into building an 8500. There's also some helpful 'part location' drawings, (reproduced in the schematic section), as well as assembly drawings. Take a minute to read the introduction at the front of the section, then index and label each manual.

Section 6: Options and Accessories.

At least half of the important information you'll need will be in this section. Section 6 is a series of 'mini-manuals' for the option modules. Each option has it's own section containing operation, theories, performance test, calibration, troubleshooting, and part numbers. The options include ac/dc converters, ohms converter, current shunt, and remote modules. In other words the modules that make the 8500 a 'multi' meter.

As you can see, we'll need to be more creative when indexing

this section. What I suggest is dividing and customizing section 6 by the option level. That means that each option gets its own ringbook index and label.

The option information is similar from manual to manual, except for the ohms converter. For the 8502 it's an -02, and for the 8505 and 8506 it's an -02A. There is a difference so you'll want to label them accordingly.

Start at the beginning of section 6 and work your way to the end, one manual at a time if you'd like. You'll discover that the 8506 has no ac/dc converter options. Thats because it's ac converter is a standard module, the TTRMS.

It's probably a good idea to call each option by name and number, for example, I call the current option: 'Current -03'. When you finish with section 6, go on. We're almost done!

Section 7: General Info, Manual Changes, and Software Cal.

For the 8502, section 7 has one page of interest. The list of World Wide Service Organizations. Find this page and locate the service center closest to you. Underline the phone number so that when you need to order parts, or have a technical question you'll be able to find it quickly. Most techs don't bother indexing this section, but you decide for yourself.

The 8505 and 8506 manuals use section 7, appendix 7B to detail the software calibration procedures. This is an important section. Index and label it 'Software Cal', or 'Soft Calibration' for now. Then, if you want, you can change it after you find out what a software cal is.

Section 8: Basic Voltmeter Schematics.

Whether you're a 'module level' or a 'component level' tech you'll use this section alot. I put an index at the beginning of the section and called it 'Schematics' and left it at that. Since half the schematics you'll refer to are in the 'option section', labeled by module name, this descriptor works fine. Just remember that the 'schematic' section covers the 'standard voltmeter' modules.

Take some time to look through this section, then index and label it. Be sure to find the 'Table of contents' for this section. When your done labeling, indexing, and customizing, take one more look at each manual as a whole. Read your labels and try to picture what's in each section. Before you go on to the next exercise you might want to include one more important label. Your name!

What's not in the manual?

The 8500 manual set is complete to a certain point, but during the learning stage we'll need some additional references. Most of what you'll need is in the student handout package. The 8500A student handout, the troubleshooting bulletins and application notes discuss the theory of operation in more detail than the manual, and the component level 'Theories' section in the workbook picks up the rest.

The only other information we need is the generic component stuff. Pin outs and 'how they work' data for digital and analog ICs. Microprocessor data sheets with waveforms and explanations. And lastly, some magazine articles that describe the 8500 multimeter when it was first introduced. I don't expect you to read all this material, but it's good to know that it exists and where to find it.

The classroom has a small bookshelf containing data books and magazines articles that discuss the 8500 meters. Take some time to look at whats available. When you have some idle time, like when you're waiting for equipment or the instructor, grab a magazine article.

Here is a list of what's on the classroom shelf.

list of classroom bookshelf materials:
- Motorola CMOS data book.
- TI TTL data book.
- Intel Component Data Catalog.
- magazine articles.
- 9010 reference material.
- 8502A/AT and 8502A/AS manuals.

The practice test.

Close all your manuals and reference material and have your lab partner pick a topic from the list. Time each other to see how long it takes to locate the topic.

1. front panel schematic for 8505
2. rms AC/DC converter, option #-09
3. mfg part no. or type for Q10 on the A/D PCB
4. schematic for the ohms converter option -02 (8502)
5. 90 day specified DC Volts accuracy of the 8506
6. dc voltage performance test
7. theory of operation for IEEE option
8. software calibration for 8506
9. schematic for the ohms converter option -02A (8505/8506)
10. front panel programming instructions

If you feel you need more practice, find the 'TOPICS' chart, (on the next page) and create your own list. Have you're lab partner quiz you by describing a topic from the list. Try to locate the information within about 15 seconds.

When you feel confident that you can locate any of the above items within 15 seconds, contact the instructor for a one on one test via the 'priority interrupt encoder'.

Unit objective #5.3: Determining Specs and Ratings.
Given an 8500 manual set, determine the specified tolerance for any range and function; determine the overvoltage/overcurrent rating for any function.

Introduction.

finding out what the 8500 will do is basic to learning how to repair the instrument. What type of accuracy should you expect when measuring a particular voltage or current? Does the accuracy change with time or temperature? When should the instrument need to be calibrated to meet the user's accuracy specifications? You'll find these specifications, and maximum input ratings in the 8500 manual.

What you'll do in this instructional unit is learn how to interpret the manual's specs and predict the minimum and maximum tolerances for any given input. The exercise has you calculate the front panel display reading for any given range, function, and time period. As usual, the practice test at the end of the unit typifies how the instructor will test your abilities.

Story problem #1: 8502 dc accuracy specs.

The exercise for this section is a simulation of what typically happens in the field. A cal lab technician has an 8502 that he is using to verify and calibrate his hand held voltmeters. These meters must be accurate to within 0.1% to pass the performance test. The set up is this. He first zeros analog meter, then applies 190millivolts to the meter to verify the full scale. He checks the applied voltage with the 8502 to make sure he's got a solid 190millivolts. But wait! How does he know that the 8502 can read 190millivolts within his required accuracy spec? Here's the solution.

The DC voltage specifications he's looking for are in section 1 of the 8502 instruction manual. Finding the accuracy specs for the 100mV range in table 1-3, he calculates the minimum and maximum display values for a 190mV input using the following formula:

Max reading = Vin+(% of Vin)+(res * number of digits).

And to interpret the formula for his particular case, (normal resolution, 100mV range, 90 day spec):

Max display reading = 190mV + (.00003 * 190mV) + (1uV * 5)

for a maximum display reading of 190.011mV. (Remember that the 8502 rounds off to 5 and 1/2 digits in the normal resolution mode). Next, he calculates the minimum display reading using this formula:

Min reading = Vin-(% of Vin)-(res * number of digits).

And plugging the numbers in:

Min display reading = 190mV - (.003% * 190mV) - (1uV * 5)

for a Minimum display reading of 189.989 millivolts.

The next step is to convert these display readings to percentages using this formula:

Total % = 100 * (Max reading - Vin / Vin).

Therefore the total deviation from the input in percentage would be:

100 * (190.011u - 190m / 190m) = +/- 0.0056316%.

Comparing these min and max numbers to 0.1% of 190mV, (190.19, 189.81) clearly puts the 8502 well within the tolerance he needs.

Now it's your turn. Determine the max and min displays for the same input voltage but on a 1 year cal cycle.

Maximum display reading 190.018 mV ?

Minimum display reading 189.982 ?

Total % deviation .0095 % ?

Story problem #2: 8505 dc volts accuracy spec.

An 8505 user wants to compute the accuracy of a 5 volt input, with 6 1/2 digit resolution, taken on the 10Vdc range. It's been 5 months since his last hardware calibration. The basic formula he must use to calculate the minimum display value is this:

Min reading = Vin-(% of Vin)-(res * number of digits).

Looks familiar, doesn't it? Well, it should. The only difference is that the "%" and "number of digits" must be calculated by adding the 90-day spec plus the number of months over 90 days, times the less than 90 spec. For our 5 month example the % would equal 0.001%, (90 day spec) plus (0.0001% * 2months), or 0.0002%, for a total % of 0.0012%.

And the number of counts would equal 8, (90day spec) plus (0.1 * 2months), or 0.2, for a total of 8.2 counts.

Plugging all the numbers in the formula:

Min = 5 - (0.0012% * 5) - (10u * 8.2), or 4.99986.

And the maximum display value formula:

Max = 5 + (0.0012% * 5) + (10u * 8.2), or 5.00014.

Now lets see if you've got the idea. The same user wants to compute the accuracy for the same 5 volt input but now its been eight months since the last hardware calibration. What are the min and max display values:

Maximum display reading_____?

Minimum display reading_____?

Total % deviation_____?

Practice Test

Answer the following questions from memory, or by locating the information in the manual.

1. What is the warm up time for the 8502, 8505, and 8506?

2. What is the maximum voltage between input hi and input low for the 8502?

3. Given an input voltage and range reading determine the maximum and minimum display readings for a 24 hr, 90 day, and 1 year period.

4. An 8505 has a display reading of 20.008 -3 for an input voltage of 20.000mV. This unit was calibrated six months ago. Is it within its rated accuracy spec?

After completing the practice test and reviewing the unit objective, notify the instructor for your one on one test via the priority interrupt scheme.

Unit objective #5.2: Identifying external parts.
Given an 8500, identify any external part including front panel switch groups, front/rear terminals, fuses and line power connections.

Introduction

Being able to quickly recognize an abnormal instrument configuration or application is a basic, but valuable troubleshooting tool. An experienced 8500 technician can spot a misconfigured unit simply by observing the system set up to verify some basic points. Is the instrument plugged in? Is the fuse blown? Has the operator selected the proper range and function? Simple problems with simple fixes, but at the same time, these are among the most common operator errors.

This unit gives you the opportunity to examine the external components and attributes of the 8500 multimeter. Using the 8500 manual and the 8500 at your station, you and your lab partner will take a detailed look at the front and back of the 8500. You'll learn where the front panel function, range, and programming switches are. You'll locate and identify the front and rear input terminals. You'll inspect the basics like where the line cord and fuses are.

After completing the exercise, take the short practice test at the end of the section. Try to identify each part without the use of the manual, but use it if you have to. Remember the objective is to be able to identify all the external parts as quickly as possible. The practice test typifies what the instructor will ask when you do the one on one test.

What is that thing?

The 8500 manual set does an excellent job of describing the external attributes of each of the three instruments. Section 2 details the front and back of the dvm in a pictorial and numbered chart arrangement. Turn to this section and follow the chart from beginning to end while locating each part on your instrument. When you finish the chart, check yourself by taking the unit practice test.

Practice Test.

Identify each item in the following list by locating it on the instrument.

- current fuse
- offset switch
- line fuse
- rear input connecter
- exponent display
- power-on indicator light
- line fuse
- input HI terminal
- guard terminal
- source LO terminal

Contact the instructor for your one on one test when you feel confident that you can locate and identify the 8500's external parts.

Unit Objective #5.1: Replacing the bad part.
Given an 8500, disassemble and reassemble the instrument and any module; remove any component, and locate and order the appropriate replacement part.

Introduction

This unit will give you a chance to make all those clumsy disassembly mistakes in the classroom instead of on the job. What you'll learn is how to safely take any 8500 apart. How to remove and disassemble any module, and how to desolder and replace components without damaging the printed circuit board. You'll also learn how to order the correct part from fluke by having all the necessary information.

The exercise for this unit is in three parts. The first is a step by step disassembly and reassembly of the 8500 at your station. The second is to desolder and resolder some IC packages. The third has you locate a component on a module, find its fluke part number, and gather the information required to order the replacement part.

There is no practice test at the end of this unit so once you feel confident of your ability for the three exercises notify the instructor. As usual he will give you a one on one chance to prove your skill and will qualify you for the next unit.

Safety precautions

Safety is easy to talk about. I could write pages and pages of evidence proving that the world would be a happier, healthier, and more productive place if we all worked more safely. But I'm sure you've heard that song many times before. So instead of 'telling' you to work safely, I'll simply outline the basic safety precautions and let you practice them. Practice them here and you will develop the right work habits for on the job. Zapping an instrument, or yourself for that matter, can be a painful experience - especially when the boss is watching! So, enough talk - here's the list of basics:

- PROTECT YOURSELF! Unplug the box before you disassemble it. (especially the power supply module)

- PROTECT THE INSTRUMENT! Turn the power off before you remove or install a module.

- PROTECT THE PARTS! Read and obey the rules for static awareness. (in the manual between sections 3 and 4)

These safety precautions can also be found on the wall of classroom. Before you do any disassembling, take a second to locate and read the list one more time.

Exercise 1: disassemble and re-assemble.

The 8500 manual set describes how to disassemble the instrument, its modules, the power supply, and front panel, (section 4). Most of what is documented is useful information but the best way to learn how to take an 8500 apart is to practice. I suggest reviewing the disassembly section before you begin taking the instrument apart. Then, with the manual at hand, disassemble your instrument in the order listed in the following procedure. If you run into problems, try referring to the manual, or notify the instructor via the 'priority interrupt encoder', (blackboard).

One more thing before you get started. The following exercise has you disassemble then re-assemble an 8500. After re-assembling the instrument you'll want to verify your work by observing the front panel power-up sequence. For those of you who haven't observed this sequence, try powering up the instrument and watch the front panel display before you take anything apart. Then when you reach the end of the following procedure you'll be able to verify your re-assembly job. Read section 2-143 from the 8506 manual, or section 2-127 from the 8505 manual to find out how the meter is configured, (range, function, etc.) on initial turn-on.

Disassembly Procedure.

1. unplug and turn the unit off.
2. remove top panel.
3. flip up the a/d cal top and inspect the test points and cal pots.
4. remove the controller module.
5. disassemble the controller module (drawing in section 5).
6. put controller back together.
7. remove front panel.
8. reinstall front panel.
9. remove power supply.
10. (8505/8506 only) remove the front/rear switch assembly.
11. reassemble unit without top covers.
12. practice installing extender boards.
13. power up and observe the front panel display to verify that the unit is operating correctly (section 2-143).

Exercise 2: desolder and re-solder.

The performance of any precision measuring instrument is highly dependent on the physical layout and condition of the printed circuit card. The 8500 analog modules have sensitive component layout patterns designed to limit noise and offsets. Misdirected currents, even in the nano amp range flowing into certain sensitive biasing networks can cause mysterious, hard to locate problems. Therefore you'll want to take extra care not to lift any land patterns when removing components, and be sure to thoroughly clean the board after soldering.

This exercise gives you a chance to practice you're soldering/desoldering techniques on some scrape boards. What you need to do is go to the parts box and get a soldering iron, a solder sucker, a pcb marked SCRAP, and a can of rosin flux remover. If you can't locate the required equipment take a quick look around the classroom and see if the equipment is in use. If it is, go on to exercise 3 then do exercise 2 when the equipment is free.

After you've rounded up all the equipment, practice desoldering a few ICs such as op amps or digital chips. Practice until you can remove an IC without lifting any lands or pads, then resolder the ICs back in. Clean you're pcb using the de-flux spray.

When you feel satisfied with your work, return the soldering equipment but hang on to your scrap pcb. You'll need that for the one on one test.

Exercise 3: locate and order.

Ordering parts from fluke is easy. Just collect the required information, call a fluke service center, (or have your secretary call) and place the order. Now that you know the procedure, let's discuss the 'required information' part.

Most technicians have a secretary or buyer who places the order so let's concentrate on the information that she needs from you. This list is in section five of the manual.

Order information:
1. the six digit Fluke Stock number for the part.
2. the quantity you want to order.
3. the instrument's model and serial numbers.
4. the printed circuit board's number.
5. the part's reference designation .

The six digit part number is located in the manual, in table form under the column named 'Fluke Stock No'. This number, and the quantity of parts is really all that's absolutely required, however the more accurate description you give, the better your chances of receiving the 'right part' in the shortest possible time.

The instrument's complete model number is on the front of the instrument. The parts department at fluke uses this information to verify any possible component changes do to engineering modifications. The module/board name and the part's reference designation pin points the component in the instrument for the same reason - to flag modifications.

The next list of information is usually the stuff that the secretary handles but for those of you who have to place your own orders, here's what you'll need.

Buyer's list:
1. is the part 'taxable'?
2. if it's not taxable, you'll need your company's tax number.
3. address and telephone information.
4. whether you'll accept a partial shipment.
5. a purchase order number.
6. how you want the part delivered, (mail, air, pony express?).

Finding the part and placing the order.

Now that you know what information is necessary for ordering a part, lets practice locating various parts in the instrument, and in the manual. The exercise is in story problem form. The idea is this. I'll describe a typical malfunction and point you to the suspected part. Find each part first on the schematic, then on the pcb, (that's why the cover was left off after disassembling), and then find the part description and fluke number in section 5.

When you find the description in the manual, also locate the order information as if you were going to place an order through your buyer. Here's our first problem.

Problem Part #1.

I have an A/D module that gives me garbage readings for any input voltage, positive or negative. After poking around with my scope to verify some basic points I noticed that the signal at TP1 looked odd. Knowing that buffer op amp U5 is a typical problem part I compared the input at pin 3 to the output at pin 6 and sure enough, that's my bad component.

Now it's your turn. Find the bad part (U5) on the schematic, on the board, and in the parts section.

Problem Part #2.

I have a customer that was using his 8502 to troubleshoot a high powered voltage source. While he was trying to locate the problem he made a typical operator error. He tried to take an ohms measurement with power applied to his unit under test and blew up his ohms converter module. I know from experience that this typically destroys U5, so I'll need to change that part.

Find the bad part on the schematic, on the -02 option, and in the manual. (Note that this is an 8502 and an -02 not an -02A)

Summary

Since there is no practice test at the end of this unit you should be ready to take your one on one qualifying test now, but before you contact the instructor lets recap what you've learned.

You now can disassemble and reassemble the 8500 in an efficient manner. You are able to desolder components without lifting lands or pads. After you solder or handle a pcb you know how to clean up the board so it will function without any mysterious problems. You know were to locate part numbers and how to order replacements.

If you agree with the last four statements, contact the instructor for your one on one test via the priority interrupt scheme.

Unit objective #4.4: Basic operation of the 8505.
Given an 8505 and manual, configure the instrument for any range/function from the front panel and take measurements.

Introduction.

Configuration and basic operating instructions for the 8505 are in section 2. You'll refer to this section throughout this unit, so have your manual handy. The unit exercises involve hooking up a voltage/ohms source, (the 515 portable calibrator) to the front panel inputs and taking voltage measurements. You'll configure the 8505 for all the various functions and ranges, and measure the output of the 515 voltage source.

You'll first learn how to take DC readings, ohms, current, then AC. While you're taking DC measurements you'll also experiment with the range selector, zero switch, sample rate, filter, and trigger modes. Those of you who have completed unit 4.2, 8506 operation, can skip the DC stuff and go on to exercise 4, AC measurements.

Exercise 1: DC voltage measurements.

Power up sequence.

Power up your 8505 and observe the power up display message. Find section 2-127 and compare their description of 'Initial Turn-on' to your meter. The meter's configuration on power up is also described in section 2-19.

Selecting the function.

Figure 2-2 in the 8505 instruction manual, (page 2-8) shows a picture of the front panel functions group and has a brief description of each function. Find the 'VDC' header and read its description, then read the 'VAC', 'ADC', 'AAC', and 'Ohms' sections.

Selecting the range.

Now refer to the manual and figure 2-2 on page 2-9. In the middle of the page is an explanation of the 'range' group switches. Read that section then manually select a range by pressing either the up or down arrow in the range group.

Connecting the 515 to the 8505.

Power up the 515 and press the micro volts switch, (next to to power on switch). While you're letting the 515 warm up a bit, find the 'guarding' discussion in section 2-53 of the 8505 manual. Take some time to review this section, (up to and including 2-60). After you finish the guard section, take a look at the measurement connections diagram, figure 2-5.

Now that you know how to properly guard the inputs, connect the

515's output to the 8505, HI to HI and LO to LO. Make sure the front/rear switch and the guard selector switches are 'out'.

DC autorange measurements.

Once everything is connected, set the 515 to the following voltage outputs and observe the 8505 display. Determine what voltage range you are in by matching the display to table 2-3, on page 2-6.

1. 100mV range_____?

2. 5V range_____?

3. 10V range_____?

4. 400mV range_____?

Overrange measurements (section 2-81).

Set the 515 to 1 volt out. Put the 8505 in the 1 volt range by using the up or down range arrows. Now set the 515 to 3 volts out and observe the overrange indication on the display.

Zeroing the meter (section 2-83).

Set the 515 to zero volts out and disconnect the 8505 connection. Find a high quality short in your toolkit and place it across the 8505 input, HI and LO. With the short plugged in, press the 'ZERO VDC/Ohms' switch twice and observe the display and ZERO annunciator.

Sample rates (section 2-66).

Connect the 8505 to the 515 and set the output voltage to 100mV. Toggle the sample rate by pressing the sample button and observing the blink rate of the sample annunciator on the front panel.

Filter modes (section 2-75).

Toggle the filter configuration by pressing the filter button on the 8505. Observe the filter annunciator and the difference, if any, in the display reading.

Averaging mode (section 2-78).

Toggle into the averaging mode by pressing the 'AVG' button. Observe the averaging annunciator and the difference in the display reading. The biggest difference should be the slow sample rate and greater resolution in some ranges.

Triggering readings (section 2-70).

Press the 'RESET' button to put the meter into its initialized state. The meter should be in VDC, the 1000 volt range. Select the 100mV range and observe the display, (you should still have 100mV applied). Select the manual trigger mode by pressing the 'MANUAL/EXTERNAL' button. Trigger a reading by pressing the button once again and observe the sample annunciator.

Exercise #2: ohms.

The -02A ohms converter option.

The first step in making ohms measurements with the 8505 is verifying that the meter has the -02A ohms converter option installed. You can do that by cycling the power or pressing the reset button and observing the initialization message on the display, (see section 2-127). If your meter does not have an -02A installed, contact the instructor.

Taking ohms measurements.

Figure 2-5 in the 8505 manual shows how to make 2 wire and 4 wire ohms measurements. Find the figure and copy the example for 2 wire readings. Select the ohms function, grab some resistors and take some two wire measurements using the figure as a set-up guide. Experiment with auto range, and manually selecting all eight ranges.

Now select a low value resistor, (less than ten ohms) and measure and record its resistance value. Using figure 2-5 as a guide, measure the same resistor using the 4 wire set-up. Measure and record the value.

Rin_____ 2 wire reading_____

Rin_____ 4 wire reading_____

Zeroing the ohms ranges (section 2-83).

Using a high quality short, zero all ohms ranges by selecting the lowest range and pressing the 'ZERO VDC/Ohms' button. Don't forget to short the source terminals. Measure the same resistor in two and four wire modes and record the results.

Rin_____ 2 wire reading_____

Rin_____ 4 wire reading_____

Exercise #3: current.

The -03 current shunt option.

Verify that the -03 is installed in the meter by pressing reset and observing the front panel display message. If the current option is not installed, contact the instructor.

Taking DC current measurements.

Set the 515 voltage source to 10 volts out and connect a 1K ohm, 1 watt resister to the output. This will be our current source for the 8505 source inputs.

Experiment with the current function by selecting various ranges and observing the display. Try selecting all five ranges while combining different input voltages, (but don't go over 40 volts) to produce various currents.

Iin_____ Reading_____

Iin_____ Reading_____

Iin_____ Reading_____

Iin_____ Reading_____

Iin_____ Reading_____

Overvoltage protect.

The current shunt is protected against excessive voltage on the source input. The way it works is, when you select the current function by pressing 'ADC' the -03 option looks at the voltage on the source terminals. If this voltage is more than about 45 volts, then an ERROR 4 is latched and displayed. Try putting about 50V or more on the source inputs and press the 'ADC' function button. Remember that 'latching errors' have to be acknowledged by selecting another function before they are unlatched.

AC current.

The 8505 will also measure AC current if an AC option, (-01 or -09A) is installed. If your meter has an AC module experiment by connecting a 1K resistor to the output of the 515 and source various voltages.

Exercise #4: AC measurements.

The two AC options, -01 averaging, and the -09A RMS converters measure various AC voltage inputs. Both of the modules operate the same from the front panel and are selected when you press the AC function button.

AC current can be measured with either option, as long as the current option is installed. The RMS option will measure AC+DC. You can select this function by pressing both the VAC and VDC push buttons at the same time.

Measuring AC input voltages.

Verify that an AC option is in the unit by powering up or pressing reset. If the meter doesn't have an AC option notify the instructor.

Unsing the 515 as your source, take enough AC measurements to fill the following table. Vary the output of the 515 enough to cover all the input ranges. Don't forget to identify the option in your meter.

AC Option_____

Vin_____ Reading_____

Vin_____ Reading_____

Vin_____ Reading_____

Vin_____ Reading_____

Vin_____ Reading_____

Vin_____ Reading_____

Conclusions

When you finish trying all the basic measurement configurations contact the instructor for your one on one.

Unit objective #4.3: Basic operation of the 8502.
Given an 8502 and manual, configure the instrument for any range/function from the front panel and take measurements.

Introduction.

Configuration and basic operating instructions for the 8502 are in section 2. You'll refer to this section throughout this unit, so have your manual handy. The unit exercises involve hooking up a voltage/ohms source, (the 515 portable calibrator) to the front panel inputs and taking voltage measurements. You'll configure the 8502 for all the various functions and ranges, and measure the output of the 515 voltage source.

You'll first learn how to take dc readings, ohms, current, then ac. While you're taking dc measurements you'll also experiment with the range selector, zero switch, sample rate, and filter modes.

Exercise 1: dc voltage measurements.

Power on sequence.

Power up your 8502 and observe the power on display message. Find section 2-77 and compare their description of 'Initial Settings' to your meter.

Selecting the range and function.

Figure 2-2 in the 8502 instruction manual, (page 2-9) shows a picture of the front panel functions group and has a brief description of each function. Read the caption in figure 2-4 labeled FUNCTION.

Refer to figure 2-2 on page 2-10 for an explanation of the 'range' group switches. Read that section then manually select a range by pressing either the up or down arrow in the range group.

Connecting the 515 to the 8502.

Power up the 515 and press the micro volts switch, (next to to power on switch). While you're letting the 515 warm up a bit, find the 'guarding' discussion in section 2-28 of the 8502 manual. Take some time to review this section, (up to and including 2-31). After you finish the guard section, take a look at the measurement connections diagram, figure 2-5, in the 8505/8506 manual.

Now that you know how to properly guard the inputs, connect the 515's output to the 8502, HI to HI and LO to LO. Make sure that guard is shorted to low, and the source and sense lines are shorted as in figure 2-2, page 2-5.

DC autorange measurements.

Once every thing is connected, set the 515 to the following voltage outputs and observe the 8502 display. Determine what voltage range by the location of the decimal point on the front panel display. Use the following table as a guide:

Volts Range	digits and exponent
100mV	+888.888 -3
1V	+8.88888
10V	+88.8888
100V	+888.888
1000V	+8888.88

1. 1mV range 100 mV ?
2. 5V range 10 V ?
3. 100V range 100 V ?
4. 400mV range 1 V ?

Overrange measurements.

Set the 515 to 1 volt out. Put the 8502 in the 1 volt range by using the up or down range arrows. Now set the 515 to 3 volts out and observe the overrange indication on the display.

Zeroing the meter (section 2-85).

Set the 515 to zero volts out and disconnect the 8502 connection. Find a high quality short in your toolkit and place it across the 8502 input, HI and LO. With the short plugged in, press the 'ZERO VDC/Ohms' switch once and observe the display.

Sample rates (section 2-42).

Connect the 8502 to the 515 and set the output voltage to 100mV. Toggle the sample rate by pressing the sample button and observing the blink rate of the sample annunciator on the front panel.

Filter modes (section 2-39).

Toggle the filter configuration by pressing the filter button on the 8502. Observe the filter annunciator and the difference, if any, in the display reading.

High resolution readings (figure 2-4, page 2-10)

To extend the normal resolution of the 8502 to 6 1/2 digits, press the HIGH RESOLUTION button in the range group. Source various input voltages from the 515 and compare the readings in high and normal resolution. Notice that the 100mV range will

not display a high resolution reading, but simply blank the exponent display.

Triggering readings (figure 2-6, page 2-15).

Press the 'RESET' button to put the meter into its initialized state. The meter should be in VDC, the 1000 volt range. Select the 100mV range and observe the display, (you should still have 100mV applied). Select the manual trigger mode by pressing the 'TRIGGER' button. Trigger a reading by pressing the button once again and observe the sample annunciator. Toggle out of the manual trigger mode by pressing the RESUME button.

Exercise #2: ohms.

The -02 ohms converter option.

The first step in making ohms measurements with the 8502 is verifying that the meter has the -02 ohms converter option installed. You can do that by cycling the power or pressing the reset button and observing the initialization message on the display, (see section 2-77). If your meter does not have an -02 installed, contact the instructor.

Taking ohms measurements.

The 8502 manual doesn't have a good explanation of how to make ohms measurements, so turn to figure 2-5 in the 8505 manual to see how to connect the meter for 2 wire and 4 wire measurements. The way the ohms function works is, a current is forced out the SOURCE terminals and through the resistor you're measuring, and the voltage produced across the resistor is read back on the SENSE terminals. For 2 wire measurements the SOURCE and SENSE terminals are shorted, (see figure 2-2 in the 8502 manual).

Select the ohms function, grab some resistors and take some 2 wire measurements. Experiment with auto range, and manual selection of all eight ranges.

Now select a low value resistor, (less than ten ohms) and measure and record its resistance value. Measure and record the value of the same resistor using the 4 wire set-up.

Rin_____ 2 wire reading_____

Rin_____ 4 wire reading_____

Zeroing the ohms ranges (section 2-70).

Using a high quality short, (see figure 2-6, page 2-14) zero all ohms ranges by selecting the lowest range and pressing the 'ZERO VDC/Ohms' button. Measure the same resistor in 2 and 4 wire modes and record the results.

Rin_____ 2 wire reading_____

Rin_____ 4 wire reading_____

Exercise #3: current.

The -03 current shunt option.

Verify that the -03 is installed in the meter by pressing reset and observing the front panel display message. If the current option is not installed, contact the instructor.

Taking dc current measurements.

Set the 515 voltage source to 10 volts out and connect a 1K ohm, 1 watt resister to the output. This will be our current source for the 8502 source inputs.

Experiment with the current function by selecting various ranges and observing the display. Try selecting all five ranges while combining different input voltages, (but don't go over 40 volts) to produce various currents.

Iin_____ Reading_____

Iin_____ Reading_____

Iin_____ Reading_____

Iin_____ Reading_____

Iin_____ Reading_____

Overvoltage protect.

The current shunt is protected against excessive voltage on the source input. The way it works is, when you select the current function by pressing 'ADC' the -03 option looks at the voltage on the source terminals. If this voltage is more than about 45 volts, then an ERROR 4 is latched and displayed.

Try putting about 50V or more on the source inputs and press the 'ADC' function button. Remember that 'latching errors' have to be acknowledged, (by selecting another function), before they are unlatched.

Exercise #4: ac measurements.

The two AC options, -01 averaging, and the -09A RMS converters measure various AC voltage inputs. Both of the modules operate the same from the front panel and are selected when you press the AC function button.

AC current can be measured with either option, as long as the current option is installed. The RMS option will measure AC+DC. You can select this function by pressing both the VAC and VDC push buttons at the same time.

Measuring AC input voltages.

Verify that an AC option is in the instrument by powering up or pressing reset. If the meter doesn't have an AC option notify the instructor.

Unsing the 515 as your source, take enough ac measurements to fill the following table. Vary the output of the 515 enough to cover all the input ranges.

AC Option_____

Vin_____ Reading_____

Vin_____ Reading_____

Vin_____ Reading_____

Vin_____ Reading_____

Vin_____ Reading_____

Vin_____ Reading_____

Conclusions.

When you finish trying all the basic measurement configurations contact the instructor for your one on one.

Unit objective #4.2: Basic operation of the 8506.
Given an 8506 and manual, configure the instrument for any range/function from the front panel and take measurements.

Introduction.

Configuration and basic operating instructions for the 8506 are in section 2. You'll refer to this section throughout this unit, so have your manual handy. The unit exercises involve hooking up a voltage/ohms source, (the 515 portable calibrator) to the front panel inputs and taking voltage measurements. You'll configure the 8506 for all the various functions and ranges, and measure the output of the 515 voltage source.

The 8506 is similar to the 8505 and 8502 except for the AC measurement modes. There are three AC modes; normal, high accuracy, and a combination of the two, enhanced. You'll first learn how to take DC readings, ohms, current, then AC. While you're taking DC measurements you'll also experiment with the range selector, zero switch, sample rate, filter, and trigger modes. Those of you who have completed unit 4.3, 8505 operation, can skip the DC stuff and go on to exercise 4, AC measurements.

Exercise 1: DC voltage measurements.

Power up sequence.

Power up your 8506 and observe the power up display message. Find section 2-143 and compare their description of 'Initial Turn-on' to your meter. The meter's configuration on power up is also described in section 2-20.

Selecting the function.

Figure 2-2 in the 8506 instruction manual, (page 2-11) shows a picture of the front panel functions group and has a brief description of each function. Skip down to the 'VDC' header and read its description, then read the 'Ohms' and 'ADC' sections.

Selecting the range.

Now refer to the manual and figure 2-2 on page 2-12. In the middle of the page is an explanation of the 'range' group switches. Read that section then manually select a range by pressing either the up or down arrow in the range group.

Connecting the 515 to the 8506.

Power up the 515 and press the micro volts switch, (next to to power on switch). While you're letting the 515 warm up a bit, find the 'guarding' discussion in section 2-53 of the 8506 manual. Take some time to review this section, (up to and including 2-60). After you finish the guard section, take a look at the measurement connections diagram, figure 2-5, page

2-23.

Now that you know how to properly guard the inputs, connect the 515's output to the 8506, HI to HI and LO to LO. Make sure the front/rear switch and the guard selector switches are 'out'.

DC autorange measurements.

Once everything is connected, set the 515 to the following voltage outputs and observe the 8506 display. Determine what voltage range you are in by matching the display to table 2-3, on page 2-7.

1. 1mV range_____?

2. 5V range_____?

3. 100V range_____?

4. 400mV range_____?

Overrange measurements (section 2-95).

Set the 515 to 1 volt out. Put the 8506 in the 1 volt range by using the up or down range arrows. Now set the 515 to 3 volts out and observe the overrange indication on the display.

Zeroing the meter (section 2-100)

Set the 515 to zero volts out and disconnect the 8506 connection. Find a high quality short in your toolkit and place it across the 8506 input, HI and LO. With the short plugged in, press the 'ZERO VDC/Ohms' switch twice and observe the display and ZERO annunciator.

Sample rates (section 2-73).

Connect the 8506 to the 515 and set the output voltage to 100mV. Toggle the sample rate by pressing the sample button and observing the blink rate of the sample annunciator on the front panel.

Filter modes (section 2-85).

Toggle the filter configuration by pressing the filter button on the 8506. Observe the filter annunciator and the difference, if any, in display readings.

Averaging mode (section 2-91).

Toggle into the averaging mode by pressing the 'AVG' button. Observe the averaging annunciator and the difference in the display reading. The biggest difference should be the slow sample rate and extended resolution on some ranges.

Triggering readings (section 2-80).

Press the 'RESET' button to put the meter into its initialized state. The meter should be in VDC, the 1000 volt range. Select the 100mV range and observe the display, (you should still have 100mV applied). Select the manual trigger mode by pressing the 'MANUAL/EXTERNAL' button. Trigger a reading by pressing the button once again and observe the sample annunciator.

Exercise #2: ohms.

The -02A ohms converter option.

The first step in making ohms measurements with the 8506 is verifying that the meter has the -02A ohms converter option installed. You can do that by cycling the power or pressing the reset button and observing the initialization message on the display, (see section 2-143).

The 8506 supports both the ohms converter and current shunt option - but not both at the same time. Determine what's in your box, do that exercise, and skip the other one. You'll have a chance to experiment with either ohms or current, (the one you skipped) on the 8505 or 8502 meters.

Taking ohms measurements.

Figure 2-5 in the 8506 manual shows how to make 2 wire and 4 wire ohms measurements. Find the figure and copy the example for 2 wire readings. Select the ohms function, grab some resistors and take some 2 wire measurements using the figure as a set-up guide. Experiment with auto range and manually selecting all eight ranges.

Now select a low value resistor, (less than ten ohms) and measure and record its resistance value. Using figure 2-5 as a guide, measure the same resistor using the 4 wire set-up. Measure and record the value.

Rin_____ 2 wire reading_____

Rin_____ 4 wire reading_____

Zeroing the ohms ranges (section 2-100).

Using a high quality short, zero all ohms ranges by selecting the lowest range and pressing the 'ZERO VDC/Ohms' button. Don't forget to short the source terminals. Measure the same resistor in two and four wire modes and record the results.

Rin_____ 2 wire reading_____

Rin_____ 4 wire reading_____

Exercise #3: current.

The -03 current shunt option.

Verify that the -03 is installed in the meter by pressing reset and observing the front panel display message. Keep in mind that the 8506 can only measure DC current, so for those of you who would like to experiment with AC current, use the 8505 or 8502.

The 8506 supports both the ohms converter and current shunt option - but not both at the same time. Determine what's in your box, do that exercise, and skip the other one. You'll have a chance to experiment with either ohms or current, (the one you skipped) on the 8505 or 8502 meters.

Taking DC current measurements.

Set the 515 voltage source at 10 volt out and connect a 1K ohm, 1 watt resister to the output. This will be our current source for the 8506 source inputs.

Experiment with the current function by selecting various ranges and observing the display. Try selecting all five ranges while combining different input voltages, (but don't go over 40 volts) to produce various currents.

Iin_____ Reading_____

Iin_____ Reading_____

Iin_____ Reading_____

Iin_____ Reading_____

Iin_____ Reading_____

Overvoltage protect.

The current shunt is protected against excessive voltage on the source input. The way it works is, when you select the current function by pressing 'ADC' the -03 option looks at the voltage on the source terminals. If this voltage is more than about 45 volts, then an ERROR 4 is latched and displayed. Try putting about 50V or more on the source inputs and press the 'ADC' function button. Remember that 'latching errors' have to be acknowledged, (by selecting another function), before they are unlatched.

Exercise #4: AC measurements.

Section 2-152 in the 8506 manual explains how to make AC measurements. Read the section, (upto and including 2-167) and unsing the 515 as your source, take enough AC measurements to fill the following table. Vary the output of the 515 enough to cover all the input ranges.

Normal mode, input frequency _____

Vin_____ Reading_____

Vin_____ Reading_____

Vin_____ Reading_____

Vin_____ Reading_____

High accuracy mode, input frequency _____

Vin_____ Reading_____

Vin_____ Reading_____

Vin_____ Reading_____

Vin_____ Reading_____

Enhanced mode, input frequency _____

Vin_____ Reading_____

Vin_____ Reading_____

Vin_____ Reading_____

Vin_____ Reading_____

Conclusions.

When you finish trying all the basic measurement configurations contact the instructor for your one on one.

Unit objective #4.1: Preventive maintenance.
Given an 8500 and manual, demonstrate any of the three main preventive maintenance jobs.

Introduction.

This is an easy one. Simple cleaning of modules, motherboards, and external parts is probably the simplest task a technician will do. It's so simple that some technicians forget about it completely. But not the experts. They realize the obvious advantage of trying to head off trouble before it happens.

What you'll do in the following exercise is practice the three main preventive maintenance jobs: external, internal, and edge card cleaning.

Exercise 1: external cleaning.

In the maintenance section are cleaning instructions for the 8500. Find this section and read number 5, (4-24 cleaning instructions). The instructions speak for themselves. I will only add that it's not a good idea to use furniture cleaner on the top, sides, or bottom panels. It won't damage the appearance, but it makes the instrument as slippery as a wet fish.

I don't expect you to clean your instrument but, if you want to experiment with external cleaning, find the alcohol and a clean rag and have a ball. It's a good way to rub out your frustrations.

Exercise 2: air blowing.

Section 4-24, steps 3 and 4 tell you to blow clean dry air into the 8500. Follow these steps only if you are sure of the quality of your air. You don't want to blow oil or grease or dirty water into the box.

Exercise 3: cleaning the edge card connectors.

uhnh STATIC! USE CONDUCTIVE ERASER.

This is one I would like you to try. Just pull out an 8500 module, grab an eraser and start cleaning. Remember a clean connector is a happy connector and a happy connector is one that doesn't create any weird offsets or intermittent failures.

When your done with these exercises, notify the instructor. If he's tied up, go on to the next unit.

Unit objective #3.5: Advanced operation of the 8500.
Given an 8500 and manual, program any function into the 8500 from the front panel.

Introduction.

Up till now we've used only the 'default' memory values for sample rates, filter modes, etc. These are the values loaded into memory when the 8500 is first powered up, or reset. In this unit you'll get a chance to enter your own numbers into memory to control sample rates, filter configurations, set limits, enter offsets, and set math parameters.

The 8500 keyboard switches are 'multi-function'. You've probably noticed the secondary functions to the left of each key. These secondary functions are the numbers 0 through 9, a decimal point, exponent, a plus/minus, and a clear entry key. Take a minute to locate these keys.

You'll use the multi-function keys for the exercises in this unit. The keystrokes for all the functions are detailed for both the 8502 and the 8505/8506 so you can use any meter.

There's no practice test for this unit so when you've finished the exercises contact the instructor for your one on one.

Exercise 1: sample rates.

When the power is cycled, or the meter is reset, two sample rates are automatically programmed into memory. Pressing the sample button toggles between the two preset values. You can find out what these values are by pressing the RECALL, then the SAMPLE buttons. I'll use the following pattern, "<key name>" to show the keystrokes:

<recall> <sample>.

Try recalling both sample rates. They are '7' for slow and '5' for the faster rate. These numbers are used by the meter as binary exponents for determining how many samples to take before displaying a reading. The formula is this:

Sample rate = 2^n samples per display reading.

Where n is the number programmed into the meter. When '7' is programmed, there are 128, (2 to the 7th power) samples per reading, '5', equals 32 samples/reading.

The sample rate is programmable from the front panel, (and remotely) from '0' to '17'. That means the sample rate can be from 1 sample/reading to 131,072 samples/reading.

Hardware setup.

Hook the 515 up to the 8500 and set the output to about 100 millivolts, dc. Record a couple of readings, then experiment with various sample rates by programming in your own numbers. Store your results in the table below. Here's the keystrokes for entering sample rates for all three meters.

keystrokes
  8502: <store> <numeric> <sample> <n> <enter>.
  8505: <store> <n> <sample>.

Readings and results, Vin = _____

sample rate = _____ reading = _____

sample rate = _____ reading = _____

sample rate = _____ reading = _____

sample rate = _____ reading = _____

Exercise 2: filter configurations.

When the meter powers up, two filter configurations are programmed into memory. There are three more possible configurations in addition to the two default ones. The following chart shows the five possible filters:

'F' - slow filter (5 Hz low pass).
'F0' - fast filter (50 Hz low pass).
'F1' - filter bypass (no filter).
'F2' - slow filter with 550mS time out between readings.
'F3' - fast filter with 50mS time out between readings.

The slow filter is a 5Hz low pass filter. The fast is 50Hz, low pass. The 'time out' refers to a wait period held before taking readings. Time outs should be used when the input voltage is varying in large steps. The wait period gives the input circuitry time to settle to the new analog step.

Hardware setup.

Let's use the same setup with the 515 at 100mV. That will make it easier to make comparative measurements. Start by recalling the two preset filter values. Then program the other three in and record the readings.

keystrokes
  8502: <store> <numeric> <filter> <n> <enter>
  8505: <store> <n> <filter>

readings and results.

Readings and results, Vin = _____

filter mode = _____ reading = _____

filter mode = _____ reading = _____

filter mode = _____ reading = _____

filter mode = _____ reading = _____

8505/8506

For those of you who are using an 8505 or 8506, enter the averaging mode and recall the filter settings and sample rates. Stay in the averaging mode and try entering various filter configurations and sample rates.

Exercise 3: limits.

The 8500 can compare its input data to upper and lower limits, then display a 'HI', 'LO', or 'PASS' message instead of the value of the reading. What you'll do for this exercise is enter upper and lower limits, toggle into the limit mode, then vary the output of the 515 and observe the 8500's display.

Entering the limits.

Here are the keystrokes for entering upper and lower limit
  8502: <store> <numeric> <HI or LO> <n> <enter>
  8505: <store> <n> <HI or LO>

The 'n' is either the HI limit or LO limit value. Choose any values you wish, enter them, toggle into the limit mode and observe the display while you vary the output of the 515. Be sure and vary the 515 enough to display all three messages, and don't forget to log your results.

readings and results.

Upper limit _____

Lower limit _____

Vin = _____ display_____

Vin = _____ display_____

Vin = _____ display_____

Exercise 4: logging the peaks.

Toggling into the 'PEAK' mode forces the 8500 to store the highest and lowest readings. When you toggle out, these values stay in memory and can be displayed by entering the following:

keystrokes
  8502: <recall> <HI or LO> <peak>.
  8505: <recall> <HI or LO> <peak>.

Try toggling into the peak mode, then randomly vary the output of the 515. Record your 515 outputs, then toggle out of the peak mode and recall the values.

readings and results.

Vin = _____

Vin = _____

Vin = _____

Upper peak _____

Lower peak _____

Exercise 5: offsets.

Combining an analog input reading with a pre-entered numeric offset is a basic math trick available on the 8500. It works like this: the analog input is converted to a digital numeric value, then, when in the offset mode, the offset value is subtracted from the converted number. With 5.000 volts in, and an offset value of 3.000, the displayed value would be 2.000.

Hardware setup.

Enter an arbitrary numeric offset into the 8500. Use the 515 to source various voltages and record your display results. Here is the keystroke sequence:

8502: <store> <numeric> <offset> <n> <enter>
8505: <store> <n> <offset>

readings and results.

Programmed offset = _____

Vin = _____ Display_____

Vin = _____ Display_____

Vin = _____ Display_____

Vin = _____ Display_____

Exercise 6: scaling.

Scaling is another math goody available on the 8500. Like the offset mode, scaling takes the digitized input, performs some math magic, and displays the results. The formula used to compute the display value is:

display = Vin / scaling factor

So if Vin = 12.000V and the scaling factor is 0.3, when in the scaling mode the display will be 40.000. Tricky, huh?

Hardware setup.

Enter any scale you like, (except zero), pump in some volts, and record your display readings. Here's the keystrokes:

8502: <store> <numeric> <scaling> <n> <enter>
8505: <store> <n> <scaling>

readings and results.

Programmed scaling factor = _____

Vin = _____ Display_____

Vin = _____ Display_____

Vin = _____ Display_____

Vin = _____ Display_____

Exercise 7: curve fitting with mx + b.

The fanciest, (and most useful) math function that the 8500 supports combines the offset and scaling modes. The display value is altered to fit the following formula:

display = Vin / scaling factor - offset.

What happens is that the value of Vin is sent through the scaling function, (Vin / scaling factor), then the offset is subtracted. When the reciprocal of the scaling factor, and the opposite polarity of the offset value are entered into the 8500, the display formula becomes:

display = Vin * scaling factor + offset, (mx + b).

The familiar 'mx + b' is useful for 'curve fitting' the input value to display units that are significant to a set application. For example, a industrial user has a LVDT attached to a widget that moves a total of 3 inches. The output of the LVDT is presented to the input of the 8500 in volts, from 4V to 9V for the 0 to 3 inch travel. The problem is he wants the 8500 to display inches, not volts.

After applying some reverse algebra to the 'mx + b' formula, he calculates his gain, or the 'm' part as, (0 - 3) / (4 - 9) = 0.6, and takes the reciprocal to get the scaling factor, 1/.6 = 1.6667. Then he computes the 'b' part, (0 - 3) - 0.6 = -2.4, so his offset value will be 2.4, (opposite polarity of 'b').

Programming these two values into the 8500, 1.66667 for scaling and 2.4 for offset, his meter will now display 0 to 3 for a 4 to 9 volt input.

Now it's your turn. Pick some numbers, (or use the example) and give it a try. Don't forget to toggle into scaling and offset.

readings and results.

Programmed offset = _____

Programmed scaling factor = _____

Vin = _____ Display_____

Vin = _____ Display_____

Vin = _____ Display_____

Vin = _____ Display_____

Conclusions and summaries.

By now you've pressed all the front panel buttons except one, the external input. I'll give you the formula the 8500 uses to compute the display value and leave it at that. Here it is:

display = Vin / dc External reference value.

Keep in mind that the external reference has a maximum voltage rating of +/- 20 volts, and a minimum voltage input of 100uV or (Vin / 10^9). This means that with 1000 volts on the input, and 100uV on the reference, the display will read +10.0000 +6.

One more thing. The 8505 and 8506 display a flashing H in the exponent digit to signify more than thirty volts on the input.

The external reference mode is typically used for ratio measurements. There is an example in the 'application' section, (in the 8505/8506 manual the ratio should be 1.1, not 1:1).

There's no practice test for this unit. Just get ahold of the instructor for your one on one. Don't forget your workbook readings and results.

Unit objectives: 3.4 Top Ten Failures and fixes.
From memory, recall seven of the top ten failures and seven of the top ten quick fixes/checks.

Introduction.

This unit lists and discusses each of the top ten failures and ten quick fixes. Posters listing both are on the classroom wall.

There's a third list called "Frequently changed components" after the quick fixes list. You don't have to memorize this list. Just keep the parts on hand when you get back to your job.

********** Top Ten 8500 Failures **********

Common operator errors:

1. Ohms converter operation.

Operators tend to make inaccurate 4 wire measurements readings in the 10 ohms range. They forget to use high quality test leads and high quality shorts to zero the lower ranges.

2. IEEE Remote Programming.

Take a dummy first reading to empty the 8500's buffer after any reset commands. Operators frequently misunderstand the trigger commands or forget to suppress line feeds from IEEE controller with semi-colon in BASIC.

3. Determining accuracy specifications.

Interpreting the specs and applying the right formulas from manual seems to stump alot of operators.

4. Exceeding maximum ratings.

Making in-circuit ohms readings only with unit under test powered down. They also leave high voltages on input terminals when powering up the meter or selecting different functions.

5. Guard the meter.

Understanding how guard against ground loops and noise is a mystery to most operators. Symptoms show up as offsets from ground loops and erratic readings from noise.

Common hardware faults:

6. Intermittent blanking display.

Bad rams in old controller causes display to intermittantly blank.

7. Error F on power up.

The new controller cards for the 8505/8506 need to be modified to prevent cal memory from being written to on power up. This can also throw the instrument out of cal.

8. Failed Current and Ohms options.

Powering up the 8500 with a high voltage on the input destroys these options. Switching from voltage to current or ohms with a high voltage on the inputs can destroy the inputs.

9. Blown front panel fuse.

Ohms source and current terminals share the same 1.5A fuse.

10. DC Signal conditioner.

Some older signal conditioners had arcing problems when measuring 1000 volts. The new signal conditioner solves this problem.

********** Top Ten Quick Fixes/Checks **********

1. Check the power supplies.

Before chasing too many electrons around the modules, check not only the supply voltages from the supply module, but also the dc biasing voltages for each module.

2. Check the 1.5A input fuse.

If this fuse is blown it will affect the current mode and the ohms mode.

3. Reseat the modules.

When dirt and gunk collect on the edge card connectors, the meter tends to fail intermittently.

4. Make sure the specs fit the application.

Don't let the user try to do more with the meter than the accuracy specs allow.

5. Verify the meter's configuration.

Make sure the guarding is correct. Check for ground loops. Verify proper 2 and 4 wire ohms connections. Don't let the user exceed input voltage/current specs.

6. Check for obsolete modules.

If an 8502 controller is outdated, trade it in on a new one. If the controller's new, make sure it's been modified to correct the 'ERROR F' problem.

7. Pull the options.

Isolate bad modules quickly by first verifying the basic dc voltmeter then adding one option at a time to the instrument until the box fails.

8. Verify the zero setting.

Zero the meter with a high quality short for both ohms and volts. High quality zeros come from high quality shorts!

9. Reseat the socketed ICs in the controller.

Crud and corrosion tend to gunk up digital signals.

10. Check for motorola IEEE drivers (3446AP).

This device has caused numerous IEEE failures. It should be exchanged with a TI 3446 or motorola 3446A.

List of most frequently failed components

This list summarises the components that are most often replaced. You'll save alot of time if you keep your work bench, tool box, or pockets filled with these parts. Section 4 of the manual has the JF numbers for most of these parts, but some are missing, so I've included the numbers for ordering information.

- front panel ohms source/current 1.5A fuse (f1) #109330
- 3904 switching transistor: #218396
- ceramic cap .22uf bypass: #309849
- LM358 op-amp: #418566
  used on: ohms converter (-02) and current shunt (-03)
- LH0042C op-amp: #357830
  used on: signal conditioner
- 4023 CMOS 3-input nand gate: #357147
- J068 FET transistor set: #393314
  used on: a/d converter
- 2111 1K X 4 RAM IC: #404558
  used on: OLD 8502 controller card
- LM310 Buffer op-amp: #288365
  used on: a/d (typically U5)
- Power Switch S2/power supply: #291526
- Relay assembly: #515429
  used on: ohms converter (-02)
- Reed relay: #602714
  used on: current shunt (-03)
- Programmed EPROM for 8505/8506 (U23): #660449
  used on: 8505/8506 controller cards
- 4011 CMOS gate: #355198
  used on: new controller, display, a/d, IEEE, serial
- 80C97 tri-state buffer: #407759
  used on: front panel display, IEEE, parallel, serial
- MC3446 IEEE interface driver: #428649
  used on: -05 option

Practice test.

After reading about the failures and fixes practice reciting the list from memory with your lab partner. When you can remember seven out of ten, contact the instructor for your one on one.

Unit objective: #3.3 Theory of operation/electronic analysis. From memory, draw the analog and digital signal flow for the 8502, 8505, and 8506 meters.

Introduction.

This is the only unit for the module level course that discusses the 8500 theory of op. It's also the only unit that has a lecture attached. What you'll learn is the basic electrical layout of the box and how the analog and digital signals make their way though the instrument.

The text for this unit is brief. Most of the meat is in the lecture. Try to read the theories in section 3 of the 8506 manual. Also be sure to look through the lecture notes in the workbook before the scheduled lecture. The lecture notes are a schedule of what the instructor will cover. You can take your one on one anytime after the lecture.

The 8502 system block diagram.

Find section 3 in the 8506 manual, and locate the system block diagram, figure 3-1. The key points to notice on this block diagram are the three discrete system buses and how the internal modules are connected. Starting at the top of the diagram, the controller, as its name implies, is the real center of attention. It transmits and receives information on the unguarded interbus, otherwise known as the digital bus.

In the middle of the diagram is the interconnect and the isolator module. The isolator's function is to isolate the guarded interbus, or analog bus from the digital modules. Digital signals that set range and function are sent from the controller to the analog modules via pulse transformers. The digital output from the a/d converter module is coupled to the controller across the isolator in a one bit serial fashion.

At the bottom of the diagram is the high quality bus. This represents the front and rear analog input signals that connect to the analog options, and the signal conditioner.

Read the description of the block diagram from the manual starting with section 3-4. Stop when you get to the controller, 3-10.

The Controller Module.

The 'foreground' program, or 'process' runs in it's own asynchronous way performing calculations on the raw a/d data. These calculations result in what is displayed on the front panel, or sent out a remote device.

The 'background' process is executed synchronously on an interrupt bases, (the mark interrupt). This 'mark' interrupt occurs about every 2mSeconds, (eight times the line frequency).

The background program has three main functions. 1:sending the buffered display data to the front panel module while reading the front panel switches. This data is the calculated data, not to be confused with the 'raw' data. 2: commanding an a/d conversion and collecting the 'raw' conversion data. The raw data is the binary polarity bits from the A/D. 3: commanding range and function information to the analog modules.

Read through section 3-10 in the 8506 manual and study the flow charts, figures 3-3, and 3-4. Stop when you reach the DC Signal conditioner, section 3-22.

8506 analog signal flow.

Figure 3-2 in the 8506 manual shows the analog signal flow. The main point of this diagram is that the basic voltmeter routes the input voltages first to the dc signal conditioner, then to the filter module, and lastly to the a/d converter. The ohms option places its output on the RT1 bus line for use by the signal conditioner.

Now turn to figure 3-2 in the 8505 manual where you'll find the analog signal flow for the 8502/8505. The current option places its output on the RT1 bus line, however it can be used by the signal conditioner or an ac converter module, (you can't use the ac options in the 8506). The ac options place their outputs on the RT6 bus line as a direct input to the active filter module, bypassing the signal conditioner.

The following chart shows the inputs and outputs of each analog module for the 8502/8505. Review this while you study figure 3-2.

Module name	analog inputs	analog outputs
a/d converter	RT5,	none
active filter	RT6, ext. ref hi/lo	RT5
dc signal conditioner	RT1, input hi/lo	RT6
ohms converter	input hi/lo	RT1, source hi/low
current shunt (-03)	source hi/lo	RT1, RT3
ac converter (-01)	input hi/lo, RT3, RT1	RT6
rms converter (-09A)	input hi/lo, RT3, RT1	RT6

After you've reviewed the analog chart, return to the 8506 manual and finish reading the section. When you've read section three, go on to read the theory of operation for all the 8505 and 8506 options. If you have any questions, write them down and ask them during the lecture, or notify the instructor. While you're reading keep the main objectives, digital and analog signal flows, in mind and try not to get caught up in the component level details.

Unit objective #3.2: Software calibration.
Given the 8500 manual set, demonstrate how to execute a software calibration on an 8502, 8505, and 8506.

Introduction.

Software calibration procedures for the 8505/8506 are in section 7B, and in section 604 for the 8502's cal memory option. The 8505/8506 have cal memory as a standard so we'll concentrate on their procedures. Software calibration can be done from the front panel or remotely through an interface option, but to keep things straight we'll discuss only the front panel procedures.

What's a Software Cal?

Let's take a look at how the 8500 reads an input voltage, then displays its value:

1. an analog voltage is applied to the meter's input terminals
2. this voltage is conditioned, filtered, and sent to the a/d
3. the a/d sends polarity data back to the controller module
4. the raw polarity data is processed and sent to the display

When you take measurements with the 8500, the value on the front panel display is a digital representation of the analog input. This digital data is altered before being displayed. The software cal simply stores numbers in memory that are used to alter the display data so that what's displayed matches a reference point.

The procedure stores data for two basic corrections: zero and gain. The zero correction values are entered for each range in dc volts and resistance functions by shorting the inputs, (zero volt reference) and recording the 'zero reference' value. Gain correction factors are stored for each range, and for all functions by applying a reference input that is within 60% to 100% of full scale and entering a numeric string representing that value. The 'numeric string' computes the gain correction factor necessary to produce the right display value.

The gain and zero correction numbers are stored in non-volatile memory, on the controller module, (in the EAROM). When the power is turn on the zero values are transferred from non-volatile memory to temporary memory, or RAM, and used only when the 'ZERO' mode is selected. New temporary zero values are stored in RAM each time the 'ZERO' mode is toggled into, but the 'calibrated' zero values can be re-loaded by pressing the reset button or cycling the power.

The exercises.

The following paragraphs discuss the software calibration procedures in general terms. The in-depth procedures are in the manual in section 7B-21, but the general procedures give you the basic idea.

If your meter is warmed up, you can practice doing the 'zeroing' procedure but we're not set up to do a full scale cal, so just read the gain procedures to get a feeling for which buttons to push. When you've finished reading the procedures take the short practice test, then notify the instructor for your one on one.

CAUTION: Make sure the Cal Switch is OFF before cycling power to the meter. If you turn the power on with the cal switch on, garbage gets written into cal memory and the display will flash an error 'F'.

Storing zeros (section 7B-5).

The software cal begins by storing zeros for volts and ohms. To make sure the meter is stable, allow the instrument to warm-up at least two hours, then turn the rear panel cal switch on. The next steps describe the procedure.

- Zeroing VDC -

1. apply a high quality low thermal short from input high to input low. Allow any thermals to dissipate.

2. select the 100mV range.

3. select slow filter (filter LED on).

4. push the VDC/Ohms Zero button to turn the zero off (zero LED off).

5. push the VDC/Ohms Zero button to turn the zero on (zero LED on).

6. the present reading is now stored as the zero correction.

7. select the next range and repeat the above steps until all ranges are zero'ed.

- Zeroing Ohms -

1. apply a high quality four terminal short to Ohms source and sense inputs.

2. select the 10 ohm range.

3. select slow filter (filter LED on).

4. push the VDC/Ohms button to turn zero off (zero LED off).

5. push the VDC/Ohms button to turn zero on (zero LED on).

6. the present reading is now stored as the zero correction.

7. select the next range and repeat the above steps until all ranges are zero'ed.

That concludes the 'zeroing' phase. Remember that when the calibration mode is selected from the back panel, and the ZERO function is toggled into, (zero LED comes on) the zero value is stored in non-volatile memory. When the cal mode is not selected, toggling into the ZERO function loads a temporary zero value into RAM.

Correcting the gain (section 7B-6).

Once the zeros are stored, the gain of each range and function can be calibrated. The following general procedure applies to all functions and all ranges. The step by step procedure is in section 7B. Remember that the appropriate cal equipment is any reference that meets the user's accuracy requirements and can generate an output that lies between 60% and full scale of the range being calibrated.

-General Procedure for any function-

1. select the range and function to be calibrated from the front panel.

2. select the slow filter (filter LED on).

3. from an appropriate source, apply an input as specified in the procedure's table for 60% of full scale.

4. push the STORE button, the numeric value of the source, then the CAL COR button.

5. repeat the above steps for each range and function to be calibrated.

That's all there is to it. I'll only add that when calibrating dc volts or dc current, corrections should be stored for both positive and negative inputs.

Storing the date (section 7B-7).

The 8505/8506 can store up to six digits to represent the date, or any number you choose. The cal mode switch must be set, (cal LED on) and only numbers - no decimal points please. The keystrokes are as follows:

<store> <numbers> <cal date>.

Recalling what's in memory (section 7B-8).

Read section 7B-8 in the manual then practice recalling the date in and out of the cal mode. Practice recalling the volts and ohms zero values while out of the cal mode.

Clearing cal memory (section 7B-10, paragraph 4).

To clear all the stored values in cal memory to zero press the STORE then ZERO VDC/Ohms buttons. Don't try this one. The only time you will want to completely clear cal memory is right before a hardware cal. Remember you have to be in the cal mode for this keyboard sequence to work.

Soft cal practice test.

1. describe the software calibration sequence for an 8505/8506.

2. what equipment is required to do a software cal.

3. when do you clear cal memory?

When you feel at ease with the software cal procedures contact the instructor for your one on one.

Unit objective #3.1: Hardware calibration.
Given the 8500 manual set, demonstrate how to execute a hardware calibration on an 8502, 8505, and 8506.

Introduction.

A hardware calibration is done to insure that the meter is performing within it's rated accuracy specifications. The meter's calibration cycle is usually 90 days or one year, depending on the accuracy requirements of the user. If an analog module has be repaired it should be checked for accuracy and performance, and calibrated if necessary.

The basic voltmeter cal procedures for the 8502/8505/8506 are in section 4 in the manual. We'll examine the procedures and the equipment requirements for calibrating the 8505 and 8506, (with the exception or the TTRMS module) starting with the 8505.

Our study lab is not equipped with the right equipment to do a real cal but you'll get a feeling for what needs to be done for each procedure. After you've finished the reading though the exercises, notify the instructor for your one on one.

Setting up for the 8505 cal (4-51, 4-53)

The 'Initial Procedure' section tells you to install the bus interconnect and monitor board and let the unit warm up for two hours. The bus interconnect makes measuring the power supply voltages a little easier, but it's not necessary. You can get to all the power supply voltages right on the power supply card.

The recommended list of equipment used in the procedure is in table 4-1. This part of the procedure is usually spent rounding up the equipment and turning it on. You can let the test equipment warm up along with the UUT.

Clearing Cal Memory.

The 'DC Calibration Procedure' has you clear cal memory by pressing the 'cal cor' button for each range and function. There is a much easier way to clear cal memory. First get into the cal mode by sliding the rear panel switch, then press the Zero VDC/Ohms button twice. For more details on this see section 7B-10, 'Clearing Operations'. After you've cleared cal memory, make sure the front/rear switches are in the proper position.

The power supply (4-56).

The power supply cal procedure is straight forward. The only item I'll add is that if you don't use the bus interconnect you'll want to tweek each voltage on the high side. You might want to mark the test and cal point loctions on drawing 4-1.

Figure 4-5 on page 4-14 of the 8505 manual has a chart of the power supply test points and their voltages. Practice locating these test points and the power supply's cal pots. If you feel ambitious find the points on the interconnect card as well.

DC signal conditioner (4-58).

This procedure sets the bias and offset for the signal conditioner's input amp. If you're going to calibrate alot of 8500s, you'll want to build yourself a 1Mohm/.22uF kludge for step 4. You should have the parts for this in you tool kit. Practice finding R52 and R53 on the conditioner module.

A/D converter cal (4-60).

The next cal points adjust the zero and ladder resistors on the A/D converter. After these points are tweeked the linearity is verified against the voltages listed in table 4-5. Read through the A/D cal then go on to the range adjustment procedure.

Range adjustments (4-71)

All DC ranging is done by the signal conditioner module. The

procedure starts with the 100mV range and works its way to the 1000V range. Read though these procedures then go on to the options.

Calibrating the options

The analog options have their own cal procedures in their respective sections. We'll take a brief look at the procedures for the 8502/8505 options starting with the ohms option.

Ohms -02A

The ohms cal procedure involves using standard resistors that meet or exceed the specs called out in table 4-1, (at the bottom of the table, under options). Step two in the cal procedure tells you to clear cal memory, one range at a time. This is done only if you're just calibrating the ohms module alone. If you're calibrating the entire instrument then you've already cleared cal memory during the 'DC' procedures. Read through the procedure and go on to the current option.

Current -03

The equipment list for the current option's cal procedure are again in table 4-1. You'll need a 200K resistor to tweek the 100uA range for step 8. Other than that the procedure is straight forward. Take some time to read through it then go on.

Averaging AC Converter -01

The cal procedure for the -01 converter begins by zeroing the output of the input/ranging amp for zero volts. Next, the procedure follows the chart in table 601-3, from step 1 to 19. These steps match range, voltage, and frequency to nominal, minimum, and maximum readings. The chart also tells you the resistor or capacitor to adjust.

Read through the entire procedure and check the list of equipment in table 4-1 to see what you'll need. Read the special instructions for selecting R55 when steps 13 or 14 are out of tolerance, then go on to the RMS converter.

RMS AC Converter -09A

There is a slight error in the pre-cal instructions for RMS cal procedure. It tells you to remove the cal memory if installed. This holds true for the 8502 but not the 8505. For the 8505, clear cal memory if it has not already been cleared during 'DC' cal.

The standard cal procedure for the rms module is more complicated than for the averaging converter. First gather the equipment listed in table 4-1. Then adjust the range zero, balance zero, balance gain, and ac zero. Following table 609A-3, adjust and check the readings for all 24 steps.

You'll have to calibrate the rms converter after repairing hardware failures on the card. If you replace certain parts on the RMS module you may have to follow some extra procedures to readjust some of the factory adjusted parts. These procedures are listed in section 609A-36, Preliminary Calibration. Read through the cal procedure, table 609A-3 and the preliminary calibration procedures to get an idea what they involve, then go on.

Calibrating the 8506.

The DC calibration of the 8506 is identical to the 8505, but the ac cal is another story, (it's another unit too). We'll put off the TTRMS cal until level two, unit number 2.1.

When you finish reviewing the cal procedures and finding the cal pots, notify the instructor for your one on one.

Unit objective #2.4: Waveform analysis.
Given an 8500 and manual, locate and take measurements from any point within the instrument using a scope or dvm.

Introduction, Exercise, and practice test.

By now you already know where the schematics are and where the hardware is inside the 8500. You also know just how much time you have before the course is over, so I'll leave the time you spend in this unit up to your better judgement. Have your lab partner choose a module, put it on the extender card, power up the meter, and chase some electrons around with your scope. Be sure to sketch your work and be ready to explain what you saw during the one on one.

Unit objective #2.3: Performance tests.
Given an 8500 and manual, execute any given performance test for any module.

Introduction.

The performance test procedures in sections 4-31, (8502) and 4-36, (8505/8506) provide a means of verifying the accuracy of the instrument. They should be used to check the meter before a calibration or after any repairs are done. The tests can also help isolate analog problems such as offset or noise.

Tests for the 8502/8505 include high and low range DC volts, autoranging, and external reference. The 8506 includes these plus an additional test for the TTRMS converter. Performance tests for the options are included in their respective sections.

This unit discusses each performance test based on procedures found in the 8505 and 8506 manuals. Our study lab is not equipped with the proper equipment to do a real performance verification, so I'll explain the highlights give you some hints on how to troubleshoot using the procedures.

Low Range DC Voltage Tests (4-40).

The low range DC tests use a standard cell and voltage divider to provide voltages from 10mV to 10V. This is a good test for verifying the DC characteristics of the signal conditioner, A/D, and filter modules. Range to range problems usually mean that the signal conditioner is faulty, while non-linearity problems that repeat in all ranges point to the A/D.

Read the instructions from the 8505 manual and inspect setup shown in figure 4-2 and the voltages in table 4.2. When you're satisfied that you understand what the procedure is asking for go on to the next test.

High Range DC Voltage Tests (4-42).

The high range voltage test does the same thing as the low voltage test but for voltages from 10V to 1000V. If your 8500 passes these two tests you can be sure that the analog sections of the A/D and signal conditioner modules are in good shape. It also verifies most of the active filter's analog circuitry. Read through the procedure, examine figure 4-3 and go on.

Autoranging Test (4-44).

This test exercises the controller and the signal conditioner to verify their ranging capabilities. The failure of this test usually means a bad controller or signal conditioner, but can also be caused by the isolator module.

Before you go on to the next test, take a close look at the 'Approximate Reading' column in table 4-3. Compare these voltages to table 4-3 in the 8502 manual. The reason for the difference is lies in the signal conditioner and its x1, x8, and x64 ranging for the 8502 as opposed to x1, x10, and x10 for the 8505/8506.

DC External Reference Test (4-46).

This procedure verifies the external reference circuitry of the active filter module. Voltages called out in procedure 4-47 are applied to the external reference input and routed to the active filter on the RT7/RT8 lines.

Read through the procedure and examine figure 4-4. When you get to step ten keep in mind that there are more Performance Test procedures for the options. That's where we'll go next.

The options.

Each analog option has its own performance test complete with a table of voltages/currents to verify. Remember that you can only do these tests after you're sure the signal conditioner, active filter, and A/D are working correctly.

Take a quick look at the procedures for the Averaging AC/DC Converter, Ohms converter, Current Shunt, and the RMS Converter then go on.

The 8506 TTRMS (4-49).

This performance test should be done to any ttrms module that has been removed from the instrument. The reason for this is that the capacitive characteristics of the ttrms module effect the calibration and performance of the board. If the module is flexed its capacitance could change enough to through it out of cal.

The ttrms performance procedure starts at section 4-49 in the 8506 manual. It describes the equipment needed to execute the test, the temperature requirements, and the required two hour warm up period for the 8506. Paragraph 4-52 tells you to use the high accuracy mode and to wait for the instrument to settle after applying new voltages. This means is that you'll spend about twelve seconds, waiting for a valid reading between new settings.

The test procedure starts at section 4-53. Read throgh this procedure and inspect figure 4-5 and table 4-4 to get an idea of what you have to do. When you're done with this procedure contact the instructor for your one on one. He'll ask you some questions reguarding procedures while discussing how to use the tests to track down analog problems.

Unit objective #2.2: Remote programming and diagnostics. Given an 8500, 1720 and diagnostic software, program and take readings from the 8500 in the remote mode.

Introduction.

The high accuracy measurement capabilities of the 8500 meter are brought to the system level by using any of the three remote programming options: the parallel, bit serial, and IEEE. The most popular remote option, the IEEE -05 can be used with any IEEE bus controller.

Remote commands for the three options are virtually the same. We'll concentrate on the IEEE with the help from some stored programs running on the fluke 1720. You'll get a chance to send remote programming codes, take readings, and execute IEEE diagnostics.

The remote programming commands can be found in the -05 option section of the 8502 manual and in section 2A in the 8505/8506 manuals. The 8505/8506 instruments have more capabilities than the 8502. These enhancements are outlined in table 2A-2 of the 8505/8506 manuals. Since most of the functions are compatible for the three instruments, you can use any one for the exercises.

If you have experience operating the 1720 controller just power it up, insert the disk and hit reset. The program will do the rest. If you need help getting started grab the instructor. Go ahead and read through the exercises and IEEE programming section while you wait.

Exercise 1: setting up and sending commands.

The 8500 will remotely accept any of the range, function, math, and other special functions available from the front panel. The commands known as 'remote codes' tell the 8500 what to do and how to act. The codes are listed in table 605-6 of the -05 option section for the 8502, and in table 2A-1 for the 8505/8506 manuals. Turn to one of these sections and find the first list of codes labeled 'INITIALIZATION'. Read these codes and try to imagine what front panel buttons you would have to press to configure the unit to it's reset state.

For the remainder of this exercise, use the 1720 to send configuration commands and read and display measurements. I'll give you some configuration examples. Choose one or two and record your results.

Example 1: Set the 515 to 100 volts out and read back the value through the 1720. Put the meter in the 10 volt range and read back the overrange data.

Example 2: Set the sample mode to '3', the filter mode to 'F2', and the offset to -4V. Set the 515 to various values and read back the values through the 1720.

Example 3: Remotely reset the meter, then set upper and lower limits. Toggle into the limit mode and while sourcing various voltages with the 515 and read the display outputs from the 8500.

1. Meter configuration:_____

Vin _____ Reading _____

Vin _____ Reading _____

2. Meter configuration:_____

Vin _____ Reading _____

Vin _____ Reading _____

3. Meter configuration:_____

Vin _____ Reading _____

Vin _____ Reading _____

Exercise 2: system diagnostics.

Entering your own programs.

Fluke troubleshooting bulletin #TB-13, and application bulletin AB-25 discuss the theories behind the IEEE bus and how Fluke instruments use the bus. Included in the bulletins are sample programs, in BASIC that can be used to verify proper bus activity. Those of you who are familiar with BASIC, and the 1720, should try entering and executing one or two programs. If you're not familiar with the 1720 operating system, but know a little bit about BASIC, read through the programs to see what they are about. If you don't know BASIC, just remember where these programs are so that when you need a simple BASIC program to test an IEEE device you'll know where to get one.

Executing diagnostic programs.

Included on your 1720 diskette is a program called TESTIT.BAS. This program was written just for the 8500. It tests the 8500 IEEE functions and verifies the hardware on the -05 card. Practice executing this program to see how it works, then try throwing in a bug, like disconnecting the IEEE cable, or resetting the address switches.

When you've got a good feeling for how the IEEE interface operates notify the instructor for your one on one.

Unit objective #2.1: Calibrating the 8506's TTRMS.
Given a functioning 8506 and manual, demonstrate how to calibrate the TTRMS module.

Intro

The TTRMS is hardware calibrated to bring it within the user's required specifications. The cal cycle is usually 90 days or one year, depending on the accuracy requirements of the user. If the TTRMS module has been removed from the instrument it should be checked for accuracy and performance, and calibrated if necessary.

The cal procedures for the TTRMS are at the tail end of section 4 in the 8506 manual. We'll examine the procedures and the equipment requirements for calibrating the TTRMS starting with section 4-85.

As you know by now, our study lab isn't equipped with the right equipment to do a real cal, so simply read the calibration procedures while following the workbook text. After you've finished the reading though the workbook and manual procedures, notify the instructor for your one on one.

The Required Test Equipment (sec 4-86).

Section 4-87 lists the recommended equipment required to cal the TTRMS. Any item can be substituted with comparable equipment. For example, the 5440 dc calibrator is a good substitution for the 335D, and a calibrated and profiled 8506 can replace the thermal transfer standard.

Section 4-89 tells you to cal the 8506 in the high accuracy mode. If an adjustment is required, select the enhanced mode to make the tweek, then verify in the high accuracy mode. This method saves alot of time because you don't have to wait for six seconds between each reading while your tweeking a pot or trimmer cap.

Ground Equalizer Adjustment (4-90).

This adjustment has you short the input HI to the TTRMS ground, then tweek the TTRMS ground until it equals the instrument's reference common. Make sure you have a clean connection between input HI and the metal post that separates the attenuator and amplifier PCBs.

Locate the metal post between the attenuator and amplifier PCBs, and R50 on the amplifier PCB. After you've found these points go on to the next procedure.

Amplifier Zero Adjustment (4-92).

The connection between input HI and the metal post provides a good short for zeroing the TTRMS amp. This procedure has you adjust the zero input bias resistor, (R15) for the gain amp, by measuring the output of the amp at the thermal sensor. Locate R15 in the schematic and on the module then go on.

Sensor Adjustment (4-94).

The output of the thermal sensor is amplified by the final stage of the TTRMS converter, the output amp. The cal procedure has you program the 8506 to a range where the attenuation and gain are close to unity, then while sourcing a 1V @ 1KHz adjust the gain of the TTRMS output amp to match the input.

The adjustment resistor, R35 is tweeked while in the high accuracy mode and the normal mode to verify that the sample and hold is in spec. Locate R35 on the amplifier pcb and on the schematic.

Attenuator and Amplifier Adjustments (4-96).

This procedure doesn't involve the 8506 at all. What needs to be done now is to record the output voltage settings from the 5200A to build a table of characterized dc to ac transfer points. Examine figure 4-5 and table 4-4 to get an idea of setup and voltage points then go on.

The Adjustment Procedure (4-99).

Before you get started with this procedure, locate table 4-18 named 'Amplifier and Attenuator Adjustments'. This table has an error on line 15. Correct the error by replacing "C30" with "C20" in the adjustment column, (at the far right) then go on.

The amplifier and attenuator adjustment procedure leads you from step to step in table 4-18. The steps contain voltages and frequencies, range information, minimum and maximum readings, and the name of each adjustment point, (pot or trimmer cap designation). The bulk of the calibrating is done here, with this procedure taking anywhere from six to eight hours or more.

Switching from high accuracy to enhanced mode speeds up the operation, but you still have to give the instrument time to settle between tweeks and new setups. Take a look at the procedure, setups, table 4-18, and the two notes at the bottom of table 4-18 then go on.

Low Frequency Attenuator Accuracy Test (4-102).

This is another data recording procedure, this time for the 20dB attenuator. Figure 4-10 shows the setup.

Attenuator Flatness Verification Test Procedure (4-103).

This test is done only once every five years or if your attenuator fails the low frequency test, (4-102). Read through the procedure, inspect the setup figure, then go on.

Conclusions.

As you've gathered by now, the cal procedures for the TTRMS are long and involved. A typical TTRMS cal will take eight to twelve hours to complete. Remember this when you consider whether to remove a TTRMS module from the instrument when troubleshooting.

When you've finished reviewing the procedures, contact the instructor for your one on one.

Unit objective #1.5: Troubleshooting.
Given a malfunctioning 8500, isolate the faulty module by using technical assistance from a fluke representative.

Introduction.

When an 8500 problem becomes a mystery, it's great to know that help is only a phone call away. This unit discusses who to contact and how to prepare yourself for the call. Most of your calls will involve component level problems so you'll need to gather specific information to present to the fluke service rep.

Investigate your problem.

Remember that calling on help is a last resort. Be sure to follow the troubleshooting trees, and try all the quick fixes before you call. If you have a special application, write down the instruments configuration and record some readings if possible. List of the troubleshooting strategies you tried and be prepared to discuss precisely what you did.

Where to find help.

All Fluke service centers repair 8500s, 8502s, and 8505s. The 8506 is serviced only at Everett, Burbank, Rolling Meadows, and Paramus. The person most familiar with the 8500 is Fluke's 'System Products' service engineer. You can contact him at the Everett Fluke office, but it's best to try to contact the local rep first. These are all good choices when you need 8500 technical help.

Phone numbers for the service centers are in the 8500 manuals, section 7, just before the appendix. In the 8502 manual they're called "World-Wide Service Organization". In the 8505/8506 manuals they're "Technical Service Centers".

Presenting your information.

Have an outline of what you plan to say. Be as specific as possible, using your notes from the 'investigating' process. While your present your problem, write down what the rep has to say. Sometimes they tend to spout information so quickly that it's impossible to remember it all. Note taking also helps you determine if the rep truly understands your problem.

Practice test.

The one on one test for this unit is an exercise in troubleshooting a component level problem. Be prepared to isolate a problem, then discuss the problem with the instructor. When you feel your ready, contact the instructor for your one on one.

Unit objective #1.4: Troubleshooting.
Given a malfunctioning 8500, isolate the faulty module using the modified troubleshooting tree from the manual.

The troubleshooting trees

At the end of section four in each 8500 manual is a table called, 'Faulty Module Isolation'. This table serves as a guide for determining the module that's making the 8500 fail. The guide, or 'tree' is one of a series of aids for locating faulty parts on any standard voltmeter module. Troubleshooting trees for each option are located in their respective sections.

This unit will discuss each of the trees and give you a chance to practice using their procedures. We'll also correct the errors so you won't be steered in the wrong direction when you get on the job.

Troubleshooting (8505, sections 4-79)

Take a minute to read the precautionary notes in section 4-79 of the 8505 manual. Don't forget to use the static ground straps when performing the exercises.

Read the troubleshooting notes in section 4-83. While you're reading the section on 'disabling latching errors' turn back to table 2-4 and review the latching error conditions. Practice disabling the latching errors with the signal filter module removed then go on to the first exercise.

Exercise 1: Power supply (figure 4-5)

The power supply troubleshooting aid matches symptoms and possible failures for both guarded and unguarded supplies. There is a note at the center of the page that says, 'If the output is higher or lower than specified, and noise is not the problem, the regulator is bad'. This holds true if you remove all the loads to the power supply. Any module inside the box can load down the supply so test it in the unloaded state before pulling any regulators.

At the bottom of the table is a drawing of the test points and their respective voltages. Practice locating each of the points on the supply card and take a few measurements with a meter or scope. These points should be familiar from the calibration exercise.

After locating the test points, read the note that explains ground integrity in section 4-85, and the non-recurring adjustment procedure, 4-88. When you've read these sections go on to the next exercise.

Exercise 2: Faulty Module Isolation (table 4-6)

Table 4-6 in the 8505 manual is our first 'troubleshooting tree'. It provides a step by step procedure for locating a faulty module. After isolating the bad module the tree directs you to the individual module's troubleshooting notes.

There is a problem with table 4-6 in the 8505/8506 manuals. The isolation procedures were adapted directly from the tested and approved 8500/8502 procedures, but haven't been fully modified for the 8505/8506. Luckily we've got some replacement procedures that are tuned to the new instruments. Refer to the handout called '8505/8506 Faulty Module Isolation Procedures Table 46'. Insert these new procedures in your manuals and discard the pages that they replace.

Read through the procedures for all three instruments to get a feeling for how they work. Try some of the procedures out on your test instrument. When you've practiced one or two procedures go on to the next exercise.

Exercise 3: Controller Troubleshooting (table 4-7)

The troubleshooting note for the controller card gives you a line about how 'complex' and 'speedy' the card is. Then it tells you that if you suspect the controller as the faulty module, it must be sent to the service center for repair. Bunk!

We know from our theory of operation section that the 8080 is an early generation, slower processer and that almost one quarter of the ICs are in sockets. Exchanging the socketed devices, looking for bad levels in obvious places, (clocks, read/write lines, non active data/address bits) and changing

the inter bus drivers will repair 90% of the controller problems.

The only time you want to send a faulty controller to the factory without trying to repair it yourself is if you have an obsolete version. This will never happen on an 8505 or 8506. If your working on an 8502 that was shipped before March of 1983 it may have an old double board controller. Still it wouldn't hurt to swap 8080s or RAMs on an old controller if you have those parts available.

The troubleshooting advice given in Table 4-7 mentions power supply checks, sync pulse and clocks, the interrupt line, and the ACK signal at TP2. These are all good points to verify. Remember that the -5 volt supply, (Vbb at TP5) is regulated on the controller card, so if that voltage is bad check the 5.1V zener, CR3. You'll gain more skill on the controller in unit 1.2, troubleshooting with the 9010.

Practice checking the test points called out in part '2.' of the controller troubleshooting table. When you're satisfied with what you see, go on to the next exercise.

Exercise 4: Front Panel Troubleshooting (table 4-8)

The information is this chart is accurate and helpful. Remember that the input terminals are routed through the front panel module so take care when handling this card and clean up any solder flux or goo that might contaminate the lines. The only reason for mentioning this here is that the display card is usually regarded as a 'digital' module that only creates 'digital' symptoms. But we know better.

Study the table and follow the possible failure's with the schematic. (The third line in the 'possible failure' column should have a comma after the word Function - there is no function U32, but there is a U32). When you've read the table, go on to the next exercise.

Exercise 5: DC Signal Conditioner Troubleshooting (table 4-9)

Table 4-9 contains more of the same symptom/possible failure stuff and some address and data information for gains and attenuation. While your reading this table make note of the parts that would require the module to be sent back to the factory to be TCed, (temp compensation). It's a good idea to highlight or mark these parts on you schematic or parts list for easy reference. When you finish reading and marking go on to the next exercise.

Exercise 6: Active filter troubleshooting (table 4-10)

The active filter troubleshooting table has a symptom/possible failure chart, address and data field information, and procedures for adjusting R14 and replacing R15 or R16. R15 and

R16 are the offset adjustment resistors that compensate for offsets in Q27 and U5. This is the easiest module to repair so simply read through the tables and procedures to get an idea of how they work then go on to the next exercise.

Exercise 7: A/D Converter Troubleshooting (table 4-11)

The a/d troubleshooting table is divided into two sections, digital and analog. Both of the sections are accurate and helpful. Read through both sections and locate the parts on your schematics that are called out in the 'possible failure' column.

When you reach the end of analog section read the 'note'. It would be a good idea to mark the 'TC' parts on your schematic or parts list so you won't forget to send the card back to the factory if one of these parts is changed.

The 'caution' note in section 4-86 advises against applying a direct input voltage to the a/d module. This is true for any voltage except a short. A good way of determining offsets caused by the A/D is to remove the filter module and short the input at RT5 to reference common, RT2. Don't forget to disable the latching errors with the filter removed.

Exercise 8: The 8505 options

Each 8500 option has its own troubleshooting section including a fault isolation chart. By now you've had some practice following these charts so I won't ask you to do any more exercises unless you want to. What I will do is briefly describe each section, and ask you to read through them.

-01 AC converter (averaging)

Table 601-4 is intended to verify that the AC converter is the faulty module. Once that is established the chart points you to figure 601-2. There is the familiar symptom/possible failure chart, although this one is weak. Luckily this card is not a typical failure module.

Read through table 601-4 and examine figure 601-2. While you're looking at the symptom/possible failure chart locate the parts on the schematic. It would be a good idea to mark the parts on your schematic that affect the input amp's offset adjust, (R51/R52 selection procedure).

-02A Ohms

Remember to use the -02A charts for the 8505/8506 and the -02 for the 8502/8500. There are 'temperature' sensitive components on this card so you should probably mark them on your schematic or part list, (the list of parts is at the bottom of table 602A-5).

There is some good information on timing and voltages for the various ranges and configurations so read through them while looking at the schematic. The charts and aids don't mention the protection op-amp, U5 but this is a common component failure as well. It usually gets taken out when the user exceeds the input voltage rating by taking ohms measurements on a 'powered' circuit.

-03 Current

More of the same. Figure 603-2 provides a limited amount of troubleshooting info and doesn't even mention the protection op-amp, U6. This part frequently fails. Read through figure 603-2, and table 603-4 then mark up the temperature comp parts on your schematic.

-05 IEEE

The IEEE is undoubtedly the most difficult module to repair but with the aid of the static bus controller, an IEEE controller and a list of the most frequent failures there's no reason to automatically ship it to a service center. The troubleshooting chart for this section, table 605-5, isolates some of the typical problems.

The most common problems with the IEEE module are the parts that are exposed to the real world - the IEEE bus transceivers. Motorola transceiver number 3446AP is the biggest culprit. The recommended replacement is TI's 3446N, or an earlier version of the motorola part, number 3446P.

-06 Bit serial

The serial module is an easy module to repair. They seldom break, so look though table 606-4 and go on.

-08A Isolator

Table 608A-2 is a symptom/possible failure chart that helps locate the typical problems. This module is a good candidate for the static controller as well. Follow the schematic while you read through table 608A-2.

-09A RMS module

Be sure and read section 609A-35 for the RMS module. The crest factor adjust has to be done at the factory, along with any temperature compensations for Q8 and Q12. Read through table 609A-4 and figure 609-2 while following with the schematic. Don't forget to mark the temperature comp parts.

Exercise 9: The 8506 TTRMS module

The strategy for troubleshooting the 8506 is the same as for the other 8500s, with one exception. Don't remove the TTRMS module until you're sure it's causing the meter to fail. The calibration of the TTRMS must be verified even if it is simply removed from the instrument. That's why you'll want to remove only the options and leave the TTRMS in the meter when verifying the dc functions.

If the meter doesn't pass the DC performance tests, and you think the problem is in the TTRMS, remove it but try not to flex the module. Then run the dc performance test again to verify that the problem is being generated by the TTRMS. If you discover that another module is the cause of the problem, return the TTRMS and run a performance test to make sure it's still in cal.

There are two troubleshooting charts for the TTRMS module. Table 4-25 helps isolate any problem on the module while table 4-26 isolates problems with the thermal sensor circuit.

There is additional aid in tables, 4-27 and 4-28. Table 4-27 shows typical test voltages at various test points for all the ranges. Table 4-28 is a truth table for all the ranges and modes.

Repacing certain components on the TTRMS module can throw the card so far out of cal that it cannot be simply 'tweeked' back

in with the standard cal procedure. If this happens you will need to use the 'factory selected component' procedures in section 4-131. They include amplifier offset, RMS sensor gain, low voltage 50KHz capacitor, and high voltage 50KHz capacitor selections.

Certain components in various circuits are adjusted only once at the factory and therefore don't require further adjusting. Procedures for tweeking these 'non-recurring adjustments' can be found starting with section 4-122. You'll have to use these if you change any part on the card. One note - the adjustment parts are not accessible from the top of the module so you have to mount the card on the large extender card, (fluke model 8502A-7001) to get to the adjustment points.

As you've probably gathered by now the TTRMS card is a complicated board to repair. Extra calibration procedures, part selection procedures to compensate for offsets, gains, and frequency response. Take some extra time to read the procedures for part selection and non-recurring adjustments. Then study tables 4-25 through 4-28.

When you've finished the TTRMS section, contact the instructor for your one on one.

Unit objective #1.3: Troubleshooting.
Given a verbal description of a typical 8500 malfunction, determine the malfunction and fix by interviewing the operator.

Relating to the Operator

A good troubleshooting strategy is an interview with the instrument operator. He can help you look like a troubleshooting wizard by providing symptoms and clues from his constant observation of the instrument. This unit lets you practice your 'interviewing skills' with your lab partner while he describes an instrument failure. There is no practice test for this one, so just do the exercises then contact the instructor for your one on one.

Asking the right questions, giving the right advice.

By now you know most of the top ten failures by heart. Use this information to direct your questioning in the operators terms. Let me demonstrate:

An 8505 customer called me on the phone to complain about his failing instrument. He explained the problem this way: "I think my 8505 has a bad ohms module. I can measure a resistor in the two wire mode but when I try to take four wire measurements I keep getting an ERROR H. What should I do?"

My response was this: Knowing that the source input is routed through the 1.5A fuse I ask, "Have you checked the input fuse?". He tells me to hold on while he checks.

When he returns he says that the fuse was blown and that when he replaced it, the four wire mode worked fine. He goes on to say, "I wouldn't have guessed that the current fuse had an effect on the ohms function, especially when the two wire mode is working. How can this be?"

I politely explain that the source input for the ohms converter is routed through the input fuse and when the fuse blows, the path is broken. The two wire mode operates normally because the front/rear switch assembly connects input HI/LO to source HI/LO and bypasses the fuse.

Before I hang up I remind him that the error codes are listed in table 2-4 of his 8505 manual. With each error code is a description of the fault, and some possible solutions to correct the fault.

The Moral: Know the common failures, and know the manual.

This example was an easy one. If the caller would have taken the time to read his manual he probably would have figured out what to do on his own. That's where you come in. You know the common failures and fast fixes from memory so solving his immediate problem is usually easy. But your job doesn't end

there. You're also familiar with the manual and can help him solve his own problems by showing him where to look next time something seems to go wrong.

Introduction to the exercises.

The exercises for this unit involve roll playing between you and your lab partner. One of you is the operator, the other is the tech. The operator may assume any attitude he wishes, however the tech must always be polite and helpful.

Exercise 1a: Explaining how to use the manual.

Explain to your lab partner how to plug in the numbers for calculating the DC accuracy of an 8506. You'll need to ask him when his 8506 was last calibrated, then show him where to look in the manual for accuracy specs. Before you end the conversation you should remind him of the advantages of doing a software calibration to increase the accuracy of his instrument.

Exercise 1b: Explaining how to use the manual.

Now give your lab partner a shot at explaining how to use the manual. Use the same topic but this time use the 8502 manual.

Exercise 2a: Recognizing a typical operator error.

Explain to your lab partner how to properly take low ohms measurements. Remind him how to zero zero his 8505 using high quality test leads.

Exercise 2b: Recognizing a typical operator error.

Reverse the rolls with your lab partner, but use the 8502 in for this one.

When you finish this exercise, contact the instructor for your one on one. Be prepared to do some troubleshooting using the interviewing skills.

Unit objective #1.2: Troubleshooting
Given a malfunctioning 8500, determine whether the controller card is operational using the 9010 microsystem troubleshooter.

The 9010 Microsystem Troubleshooter.

Here's a crash 9010 course for those of you who have never been exposed. The 9010 takes advantage of the basic microprocessor hardware configuration. The idea is this: given almost any microprocessor application, if you remove the processor you're left with an empty socket exposing data bus, address bus, and control lines. Plugging the 9010 pod into this socket lets you access and test these exposed lines.

The 9010 can be used in two basic modes - the 'stored program' mode and the 'immediate' mode. The first exercise uses a stored program to lead you through various tests.

The second exercise combines the 9010's immediate mode with a scope to signal inject and analyze waveforms. The immediate mode operation of the 9010 means that you're not running a program, but controlling the 9010 from the front panel buttons.

Troubleshooting the controller card with the 9010.

The 8500 controller is much like a single board computer, with RAM, ROM, I/O, and the usual support circuitry. The 9010 can be used to 'signal inject' by toggling data, address, and control lines while you monitor the output on a scope or with the 9010's probe.

Knowing where various devices are in memory, that is, knowing the 'addresses' is essential. These addresses should be marked on you schematic for quick reference, (you did that during the controller theory of op right?).

There is a reference manual that explains what the 'canned program' tests are doing. There is also a 9010 manual or two on the study lab's bookshelf. Feel free to read these especially if you know you'll be using the 9010 when you get back to your job.

there. You're also familiar with the manual and can help him solve his own problems by showing him where to look next time something seems to go wrong.

Introduction to the exercises.

The exercises for this unit involve roll playing between you and your lab partner. One of you is the operator, the other is the tech. The operator may assume any attitude he wishes, however the tech must always be polite and helpful.

Exercise 1a: Explaining how to use the manual.

Explain to your lab partner how to plug in the numbers for calculating the DC accuracy of an 8506. You'll need to ask him when his 8506 was last calibrated, then show him where to look in the manual for accuracy specs. Before you end the conversation you should remind him of the advantages of doing a software calibration to increase the accuracy of his instrument.

Exercise 1b: Explaining how to use the manual.

Now give your lab partner a shot at explaining how to use the manual. Use the same topic but this time use the 8502 manual.

Exercise 2a: Recognizing a typical operator error.

Explain to your lab partner how to properly take low ohms measurements. Remind him how to zero zero his 8505 using high quality test leads.

Exercise 2b: Recognizing a typical operator error.

Reverse the rolls with your lab partner, but use the 8502 in for this one.

When you finish this exercise, contact the instructor for your one on one. Be prepared to do some troubleshooting using the interviewing skills.

Exercise 1: Programmed fault isolation.

The first step in troubleshooting with the 9010 is to plug the controller module into an extender, then replace the 8080 with the 9010's pod. Of course you'll want to turn the 8500's power off, but the power to the 9010 should be on. We'll also use the test point extender card so plug it in as well.

When everything's attached, power up the 8500 and load the 9010 with its mini cassette. The data on the tape contains canned programs that test every section of the controller card.

When the tape is loaded, execute the program by pressing the execute button then '1' for program number one. The program asks you to enter the test you want to run. Choose a couple of tests at random and follow them all the way through. The only keys you need to press on the 9010 are the 'yes', 'no', 'stop', 'cont', and possibly the 'loop' key. These keys are well labeled on the 9010 so you should have no problem finding them.

When the 9010 display asks you to probe a component, locate the part and its circuitry on your schematic to get an idea of what the test is doing. Execute as many tests as you can, (time willing), and try placing some bugs in your card to make the tests fail. An easy way to see a test fail is to wait for the program to ask you to probe a specific spot, then put the probe on the wrong pin. When you've had enough of the stored program, go on to the next exercise.

Exercise 2: Troubleshooting in the immediate mode.

Introduction.

The 9010 can be used to test for basic controller failures in the 'immediate' mode. The next few exercises test about 1/2 of the controller card in a 'quick check' fashion.

Bus Test.

The 'BUS TEST' checks the address, control, and data lines. These lines are tested for gross shorts, out of tolerance power supplies and missing clocks. Set up the 9010 and controller module and give the bus test a try by following these 9010 keystrokes:

<bus test> <enter>, or <bus test> <enter> <loop>.

The 9010 display will tell you to wait, then report a pass or fail in response to the test. You can continuously run the bus test by pressing the loop key after <enter>.

Force the bus test to fail by shorting an address line to ground, (but don't short the power supply). Experiment with shorting two address lines together and record your results:

Address lines shorted:_____

Bus test responses:_____

ROM signature test.

The quickest way to verify the controller's memory circuitry is to execute a ROM and RAM test with the 9010. The 9010 ROM test asks for a start address, end address, and signature in hex. The start address for U24 is 0000 and the end address is 1FFF, and 2000 to 3FFF for U23. The signature varies from software rev to rev, but for U24, rev level V501/V601, the signature is 19B9, and C7A0 for U23. Here's the keystrokes for testing U24:

<ROM> <0> <enter> <1FFF> <enter> <19B9> <enter>.

Try this and see what happens. Then test U23 and record your results.

ROM Test results U24:_____

ROM Test results U23:_____

RAM short and long tests.

The RAM test for the 9010 comes in two forms: the short and long. The short test will find gross memory errors, like a location that won't accept new data. The long test finds gross and hidden errors. For now, lets just use the short test. Here

are the keystrokes:

<RAM short><start address><enter><end address><enter>

You can test the entire RAM, 4000 to 47FF, or just a section. For example, 4200 to 42FF. Choose a block of RAM and run the short test.

Start address_____

End address_____

Now choose a small block of RAM and run the 'long' test.

Start address_____

End address_____

Checking for toggling signals.

Using the probe on the 9010 you can check the signals that are always active when power is applied to the controller. Signals such as the 60Hz input at U27, the 8XLINE at U4, phase 1 and 2 can be verified whenever at any time - without programming the 9010 at all.

Place the 9010 probe on the following points and record your results.

Ground: Light(s)_____

+5Volts: Light(s)_____

U19, Pin 11: Light(s)_____

U4, Pin 4: Light(s)_____

Combining the 9010 and a scope.

By combining the 9010 and a scope you can signal inject into various circuit sections and trace the flow from one package to another. Practice by looping on a write function to address 4000. This is the address for U22, the RAM. When the 9010 asks you what data you want to write enter 'AA' which is '1010 1010' in binary.

Trigger on the negative transition of CE, (chip enable), channel A, while looking at various related signals on channel B. Compare your trace with the examples on the following pages.

9010 Keystrokes:
<write><4000><enter><AA><enter><loop>.
Chip enable: U22, Pin 18 and Write: U22, Pin 21.
Scope set to 0.2uS sweep, 2volts/div.

Chip enable: U22, Pin 18 and Data 0: U22, Pin 9.
Scope set to 0.5uS sweep, 2volts/div for ChA and ChB.

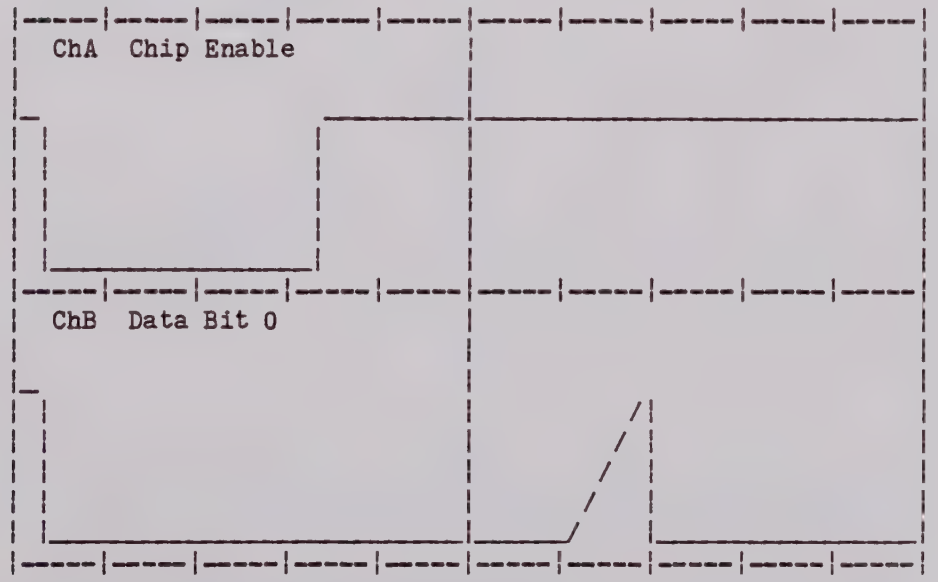

Chip enable: U22, Pin 18 and Data 1: U22, Pin 10.
Scope set to 0.5uS sweep, 2volts/div for ChA and ChB.

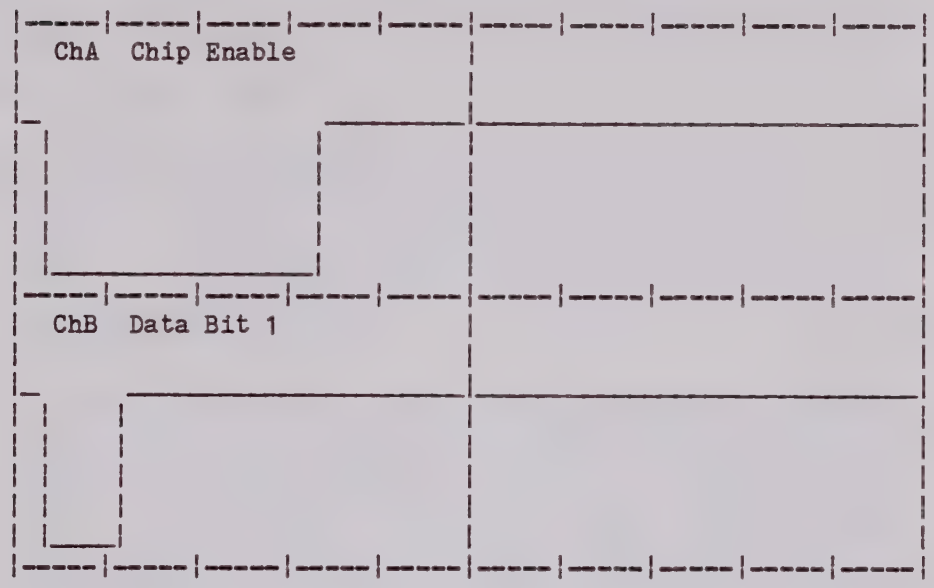

Chip enable: U22, Pin 18 and Data 2: U22, Pin 11.
Scope set to 0.5uS sweep, 2volts/div for ChA and ChB.

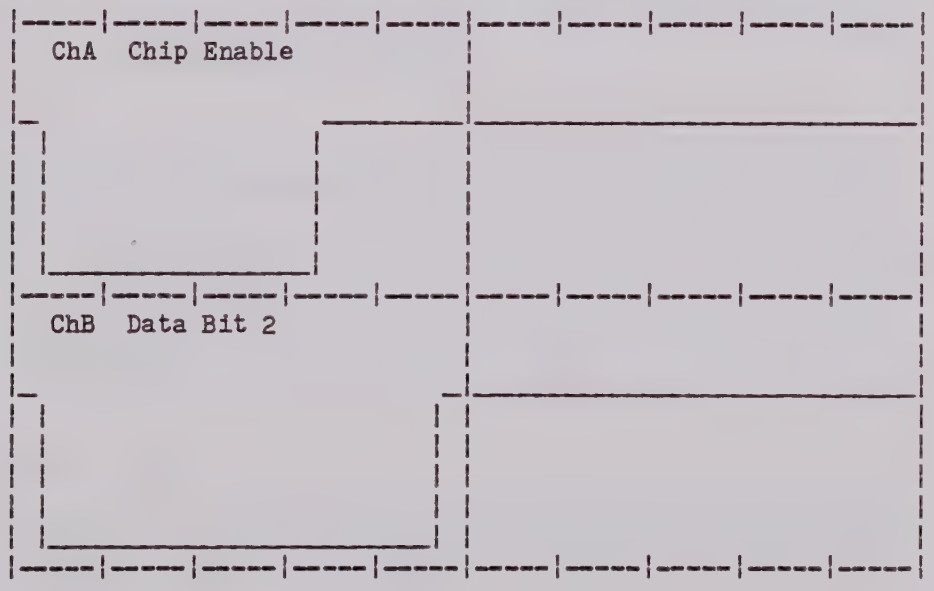

When you finish experimenting with this last exercise notify the instructor for your one on one.

Unit objective #1.1: Troubleshooting.
Given a malfunctioning 8500, isolate the faulty module and order a replacement from the fluke Modular Exchange Center by being fully prepared with all the necessary MEC details.

What the HEC is MEC?

The fluke modular exchange center (MEC) provides access to any module for the 8500 multimeters on an exchange basis. The way it works is, if you have a faulty module, you may trade in your old board on a new one through the exchange center. The center then quotes the exchange price and sends you the new module. (The 'new' board can be a new or re-furbished module, factory calibrated and verified).

The biggest advantage to using this program instead of doing all the repair work in house is the fast turn around time. Almost any 8500 instrument can be repaired within 24 hours. The disadvantage to using the MEC program is the exchange cost versus in house repair costs. If the module's fault is in the list of frequent failures, a component level tech could probably repair the unit in less time and for less money than the exchange would take.

How to 'MEC' an 8500 module.

After isolating the faulty module, MECing the replacement is done by collecting information and making a phone call. Here's a list of the info you'll need:

Product series:_____ Date:_____
Customer's name:_____
Ship address including ATTN:_____
Billing address:_____
Module number:_____
Unit serial number:_____
Purchase order number:_____
In/out of warranty:_____
Fault description:_____

Practice test

No practice for this one. Just contact the instructor for your one on one. Be prepared to isolate a hardware failure to the module and 'MEC' a replacement.

Complete Block Diagram

1. 8500 architecture is similar to microcomputer.
2. three busses: unguarded digital, guarded interbus, high quality.
3. controller orchestrates all guarded and unguarded bus activity.
4. front panel display and switches provides interface.
5. measurement inputs: volts, ohms, current, AC.
6. DC ranging done on the signal conditioner.
7. the active filter module filters the input and multiplexes external reference inputs.
8. the A/D converter uses a recirculating remainder conversion technique.
9. the power supply has guarded and unguarded supplies.
10. 8505 and 8506 bus stuctures are similar, but do not support the cal memory module, (cal memory is on the controller for the 8505/8506).

8502/8505
ANALOG SIGNAL FLOW

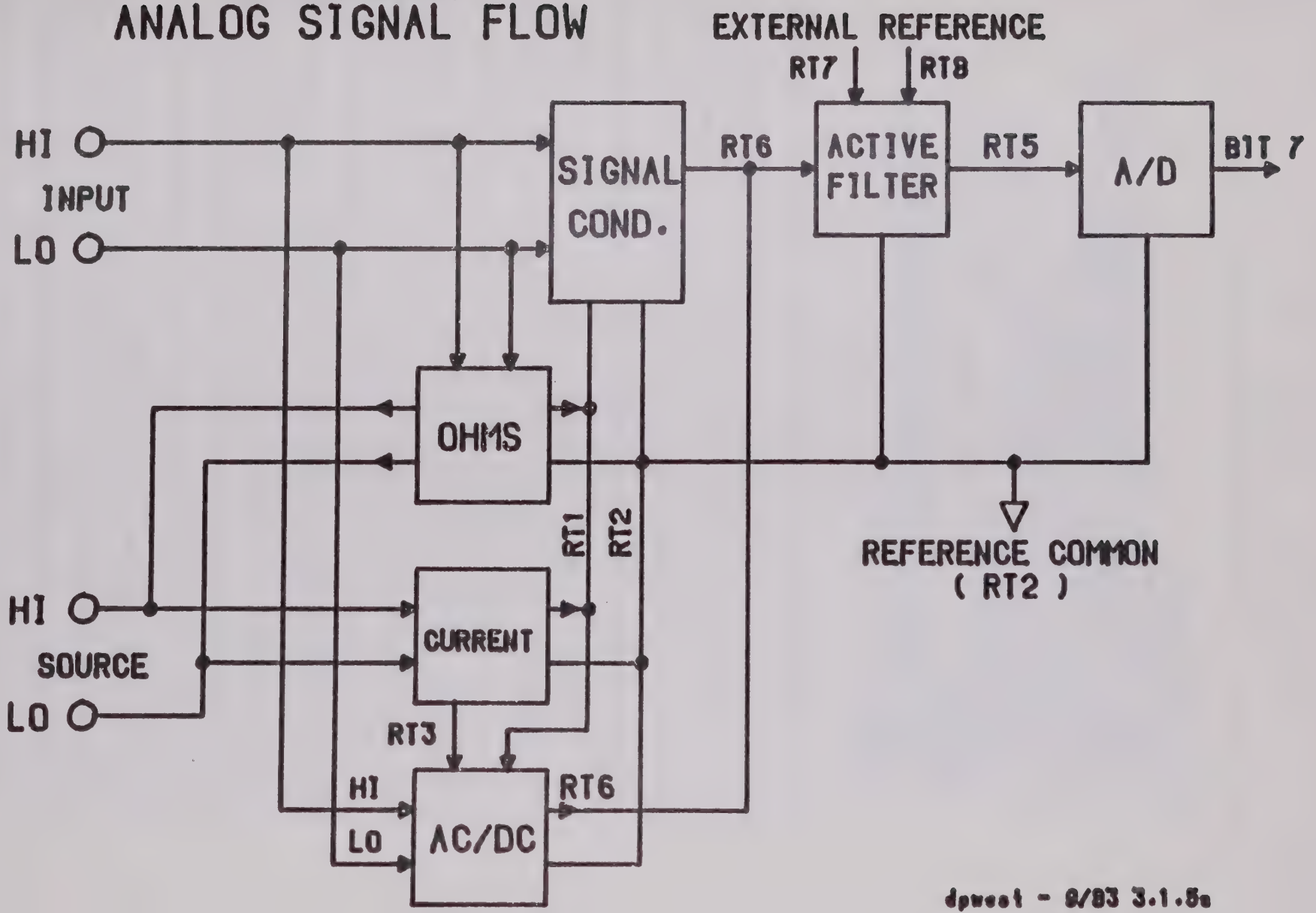

dpwest - 9/83 3.1.5a

Analog signal flow

1. front terminal inputs: sense and source
2. rear inputs: sense and source
3. dc voltage path: from conditioner to filter to a/d
4. digital information from a/d transmitted on ID7
5. interconnect/isolator to controller to display and/or remote device
6. dc current path: from current shunt to conditioner ...
7. ac voltage path: from ac/dc converter to filter
8. ac current path: from current shunt to ac/dc converter ...
9. ohms path: current output from source terminals, voltage measured RT1 at signal conditioner
10. external reference inputs to active filter

8506
ANALOG SIGNAL FLOW

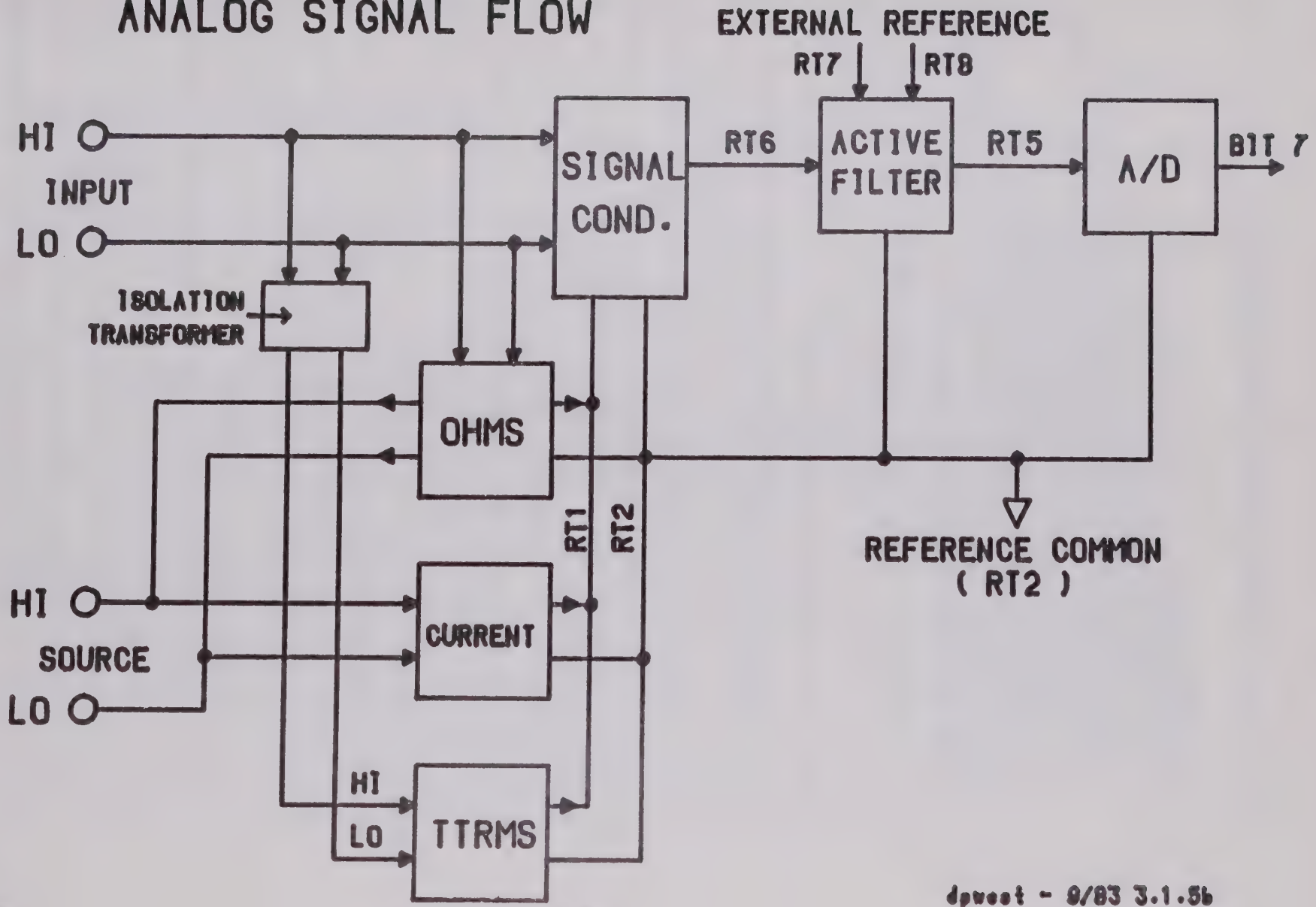

dpwest - 9/83 3.1.5b

Front/Rear Switch Assy: 8505 & 8506

1. S1: front/rear; selects between front and rear analog inputs; activates CR1 in the front position.
2. S2: INT/EXT guard; shorts input guard to LO.
3. S3: 2 and 4 wire ohms; shorts input HI/LO and source HI/LO.
4. L2 isolates the TTRMS module from dc bus.
5. L1 protects the ohms and current module from current spikes.
6. front and rear fuses for input and source HI

Power Supply Block Diagram

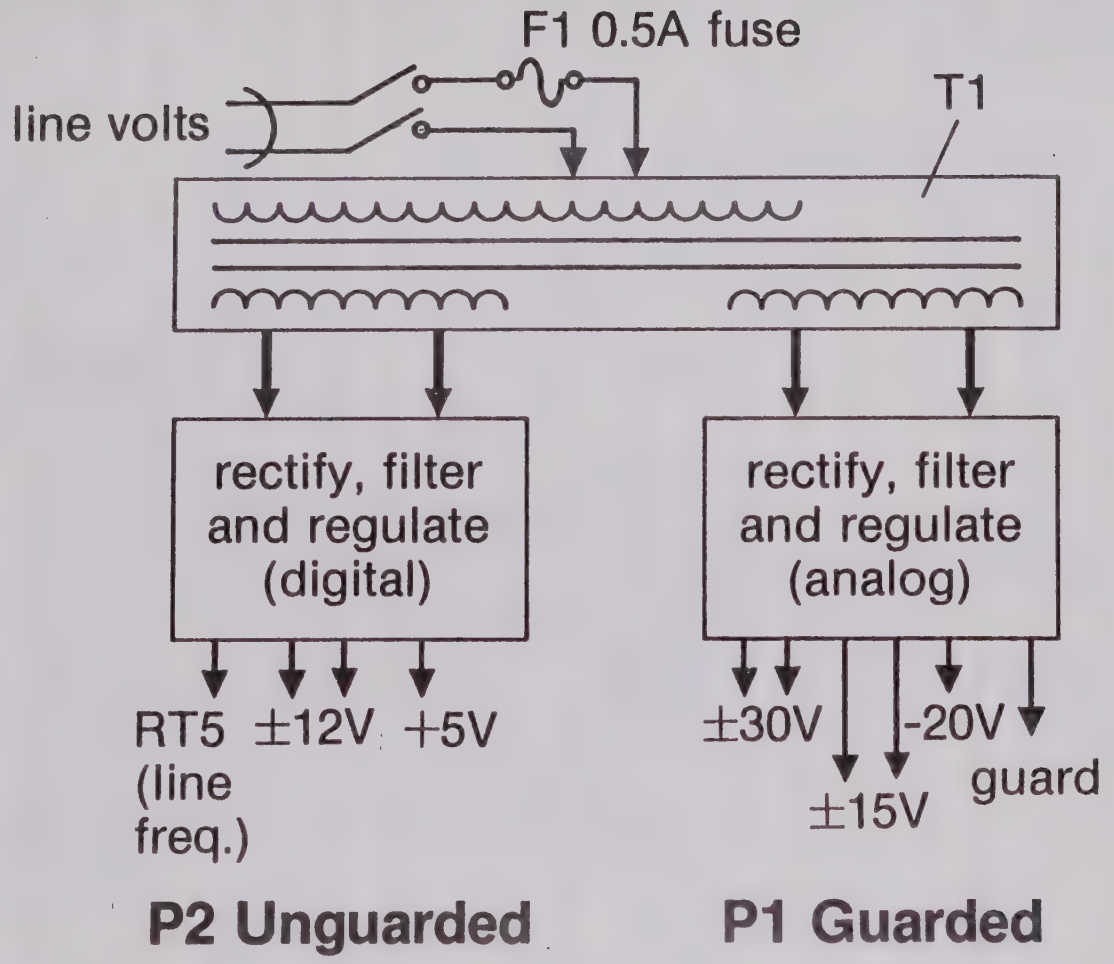

3.1.2/5.1.2 DPW/83

Power Supply Block Analysis

1. 120/240v 60hz line input
2. transformer outputs to filter/rectifier/regulators
3. linear regulator outputs to instrument RT lines
4. line frequency at RT5
5. p2 is digital - controller, IEEE, front panel
6. p1 is analog - a/d, analog options, etc.

Power Supply Input Transformer

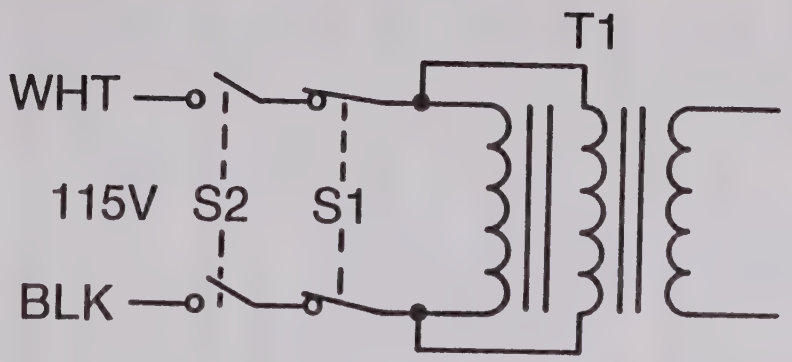

115 Volt Configuration

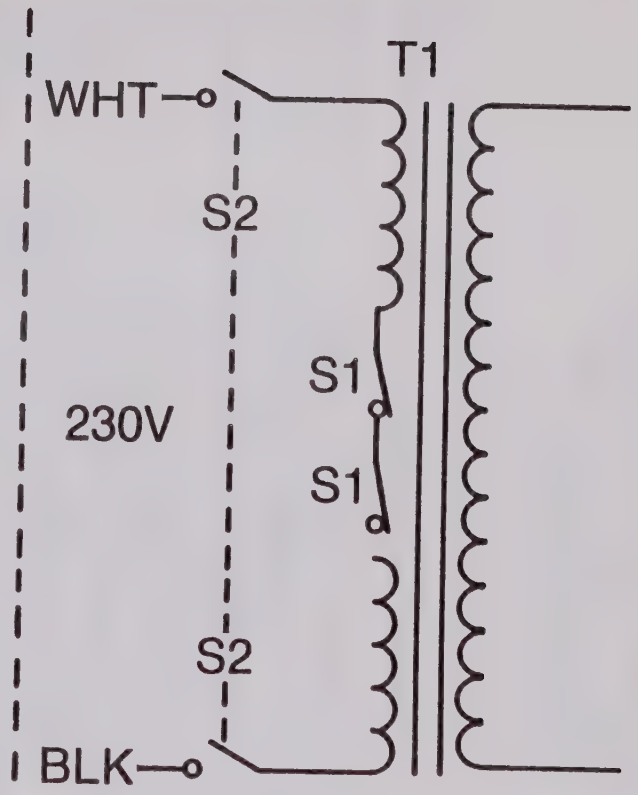

230 Volt Configuration

5.1.2.1 DPW/83

Power Supply: transformer input
graphic and workbook section 5.1.2.1
1. 115 volt parallel configuration
2. 230 volt series configuration

Analog Supplies

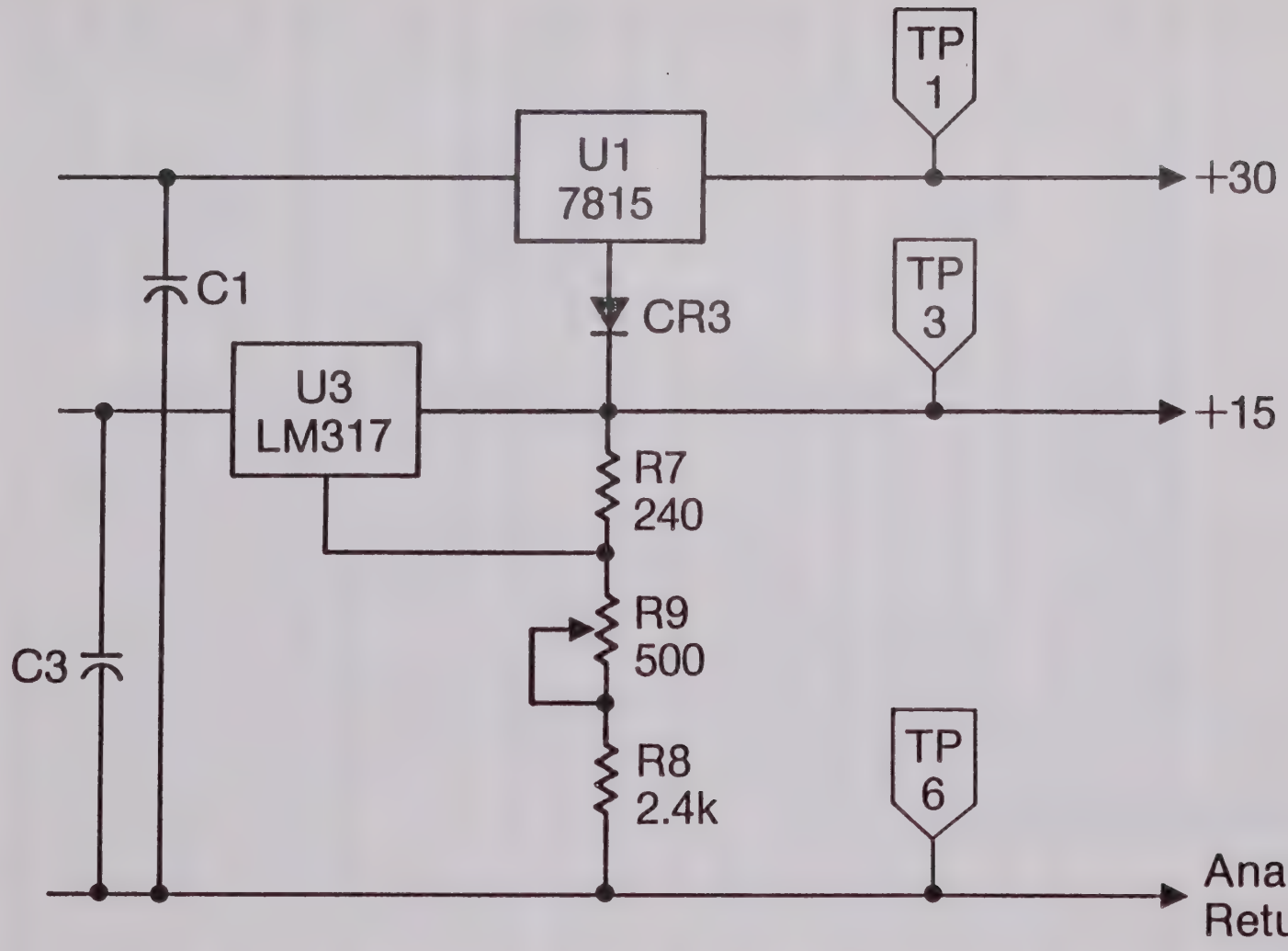

5.1.2.2a DPW/83

Power Supply: analog supplies
first graphic (a)
1. stacked linear regulators for +15V and +30V
2. r9 adjusts 15v and effects the 30v output
3. cr3 prevents power up latching problems
second graphic (b)
1. guarded digital supply: 5V differential
2. Vcc and Vdd at -15 and -20 volts
3. r5 adjusts output to 5.1V

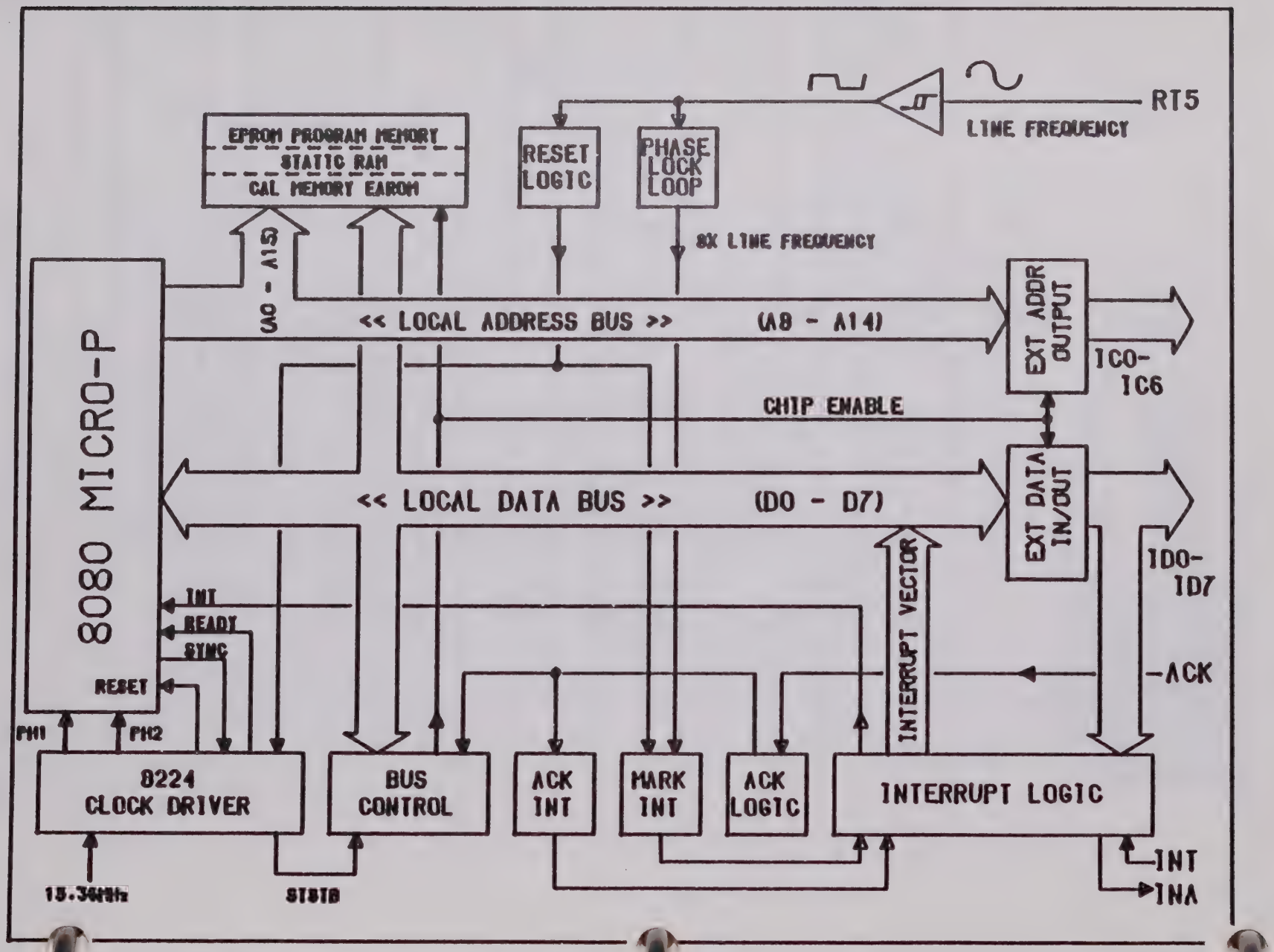

RT5
LINE FREQUENCY
EPROM PROGRAM MEMORY
STATIC RAM
CAL MEMORY EAROM
RESET LOGIC
PHASE LOCK LOOP
8X LINE FREQUENCY
8080 MICRO-P
(A0 - A15)
<< LOCAL ADDRESS BUS >>
(A8 - A14)
EXT ADDR OUTPUT
IC0-IC6
CHIP ENABLE
<< LOCAL DATA BUS >>
(D0 - D7)
EXT DATA IN/OUT
ID0-ID7
INTERRUPT VECTOR
INT
READY
SYNC
RESET
-ACK
PH1
PH2
8224 CLOCK DRIVER
BUS CONTROL
ACK INT
MARK INT
ACK LOGIC
INTERRUPT LOGIC
INT
INA
15.36MHz
STSTB

Controller Overview

1. 8080 microprocessor based
2. 8224 clock driver: 15.36MHz, 1.7MHz operation; microprocessor status and control
3. bus control for local memory and i/o selection
4. 8505/8506 EPROM, RAM, and EAROM local memory
5. bus interface drivers for external address/data; IC and ID lines
6. ACK logic: controller addresses modules, sleeps until module sends ACK, or monostable timer interrupts
7. interrupt control for mark, ACK, and EXT interrupts
8. reset logic monitors line frequency, counts 8 valid line pulses before releasing RESET
9. line frequency phase locked and multiplied by 8 to produce MARK interrupts

Background Software Process

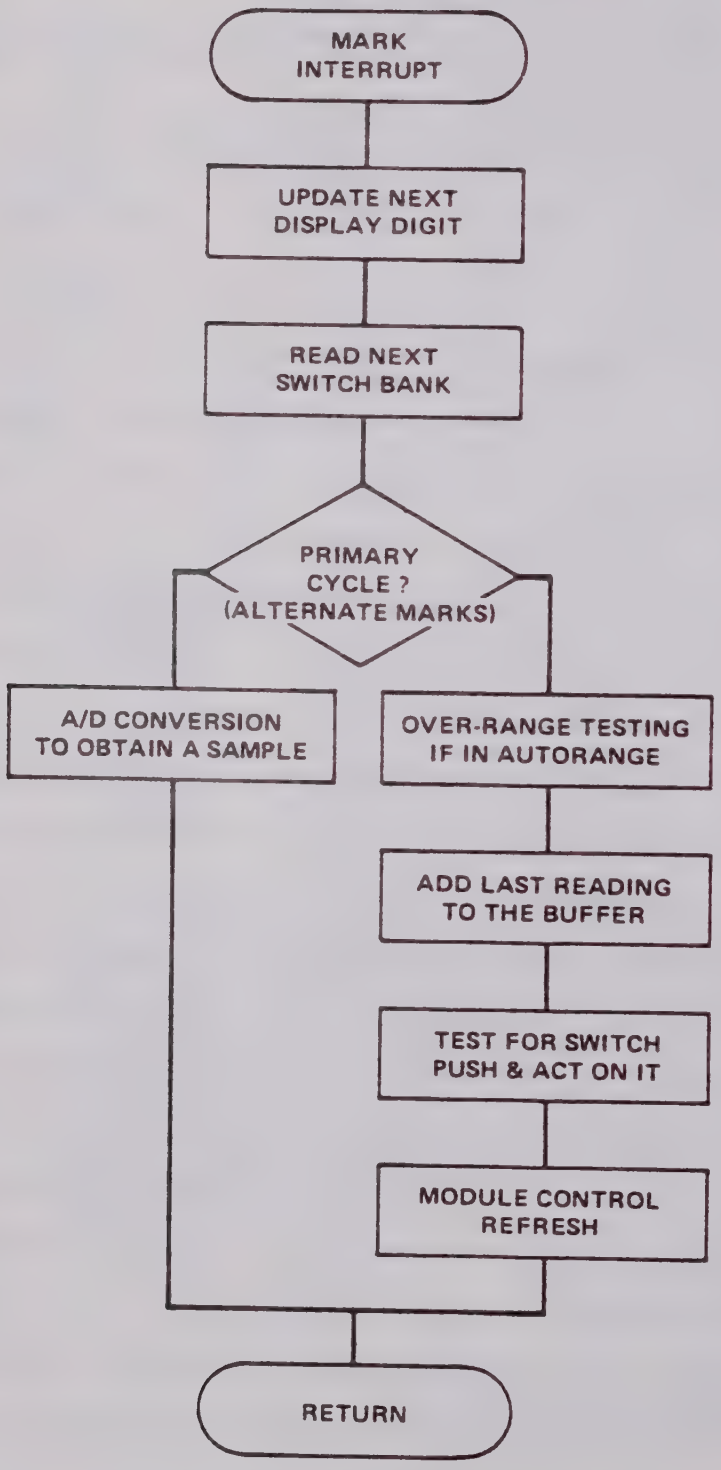

3.1.4b DPW/83

Controller: schematic
relate block diagram to schematic from manual:
sheet 2 of 2
1. memory: 16K ROM, U24 and U23; 2K RAM, U22; EAROM U20 (cal memory); decoded by U18.
2. PPL: U27 line frequency input; PPL U4, U3 divide by 8 counter/multiplier.
3. reset: monostable U2 monitors line frequency, U3 counts 8 pulses, U10 buffers the reset line.
4. address I/O: U26 and U17 bus drivers; U1 hold-off and wait logic
sheet 1 of 2, page 8-18
5. data I/O: bidirectional driver U25
6. U19 provides phase 1 and 2, sync, ready, and reset to 8080; pulses STSTB each CPU cycle to capture status in U12.
7. interrupt control: U21 priority encoder provides vector and tri-state U13 gates value to 8080.
8. U11 accepts the three interrupts, Mark, ACK, and EXT
9. ACK input U16

Software (foreground)

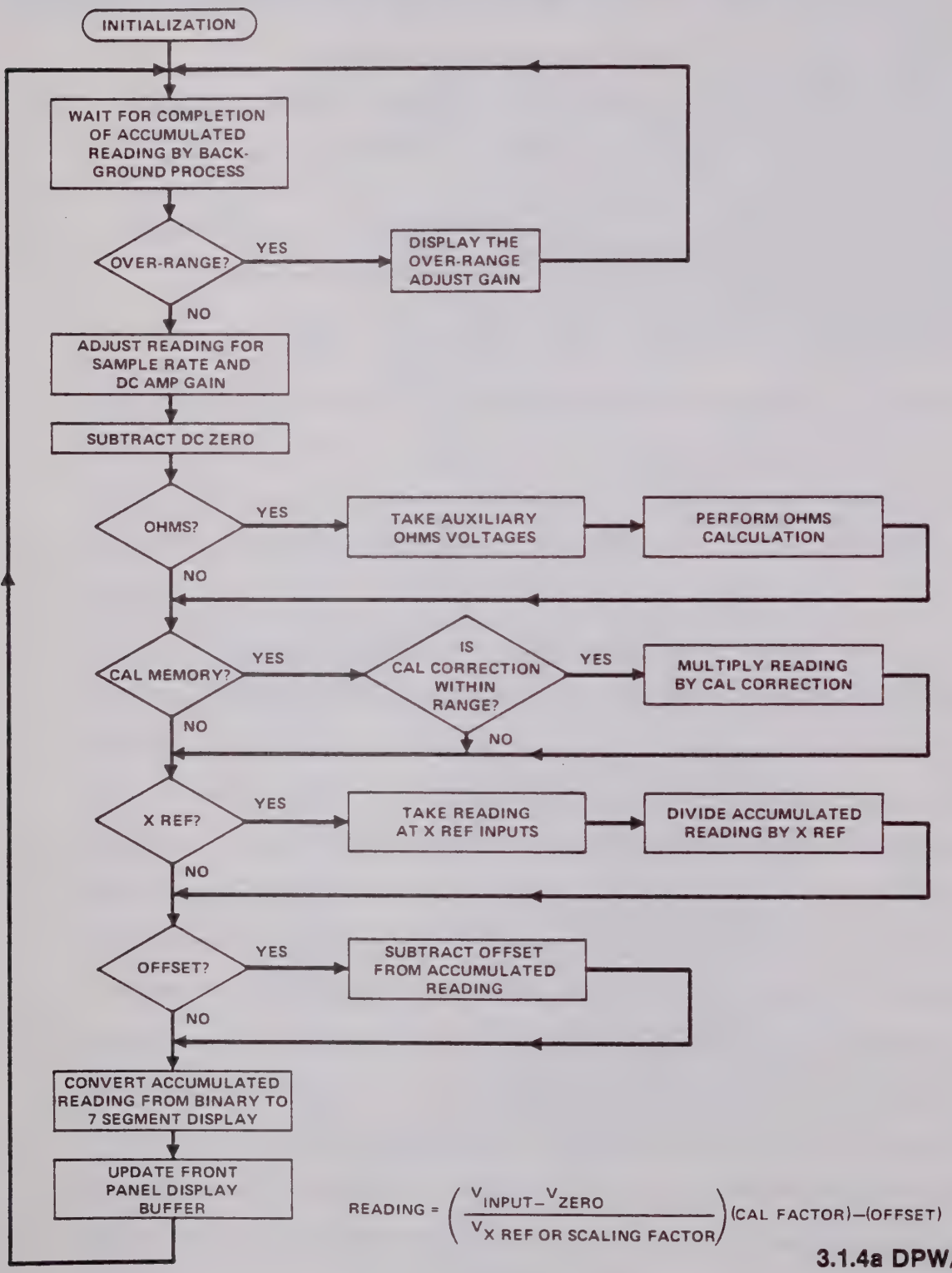

$$\text{READING} = \left(\frac{V_{\text{INPUT}} - V_{\text{ZERO}}}{V_{\text{X REF OR SCALING FACTOR}}} \right) (\text{CAL FACTOR}) - (\text{OFFSET})$$

Software Overview

1. 8500 executes foreground and background routines.
2. Foreground does math and linearization.
3. Mark interrupt background updates the display and refreshes the analog modules.
4. 8505/8506 foreground processes also pulse the scan advance output on controller.

Memory Decoding

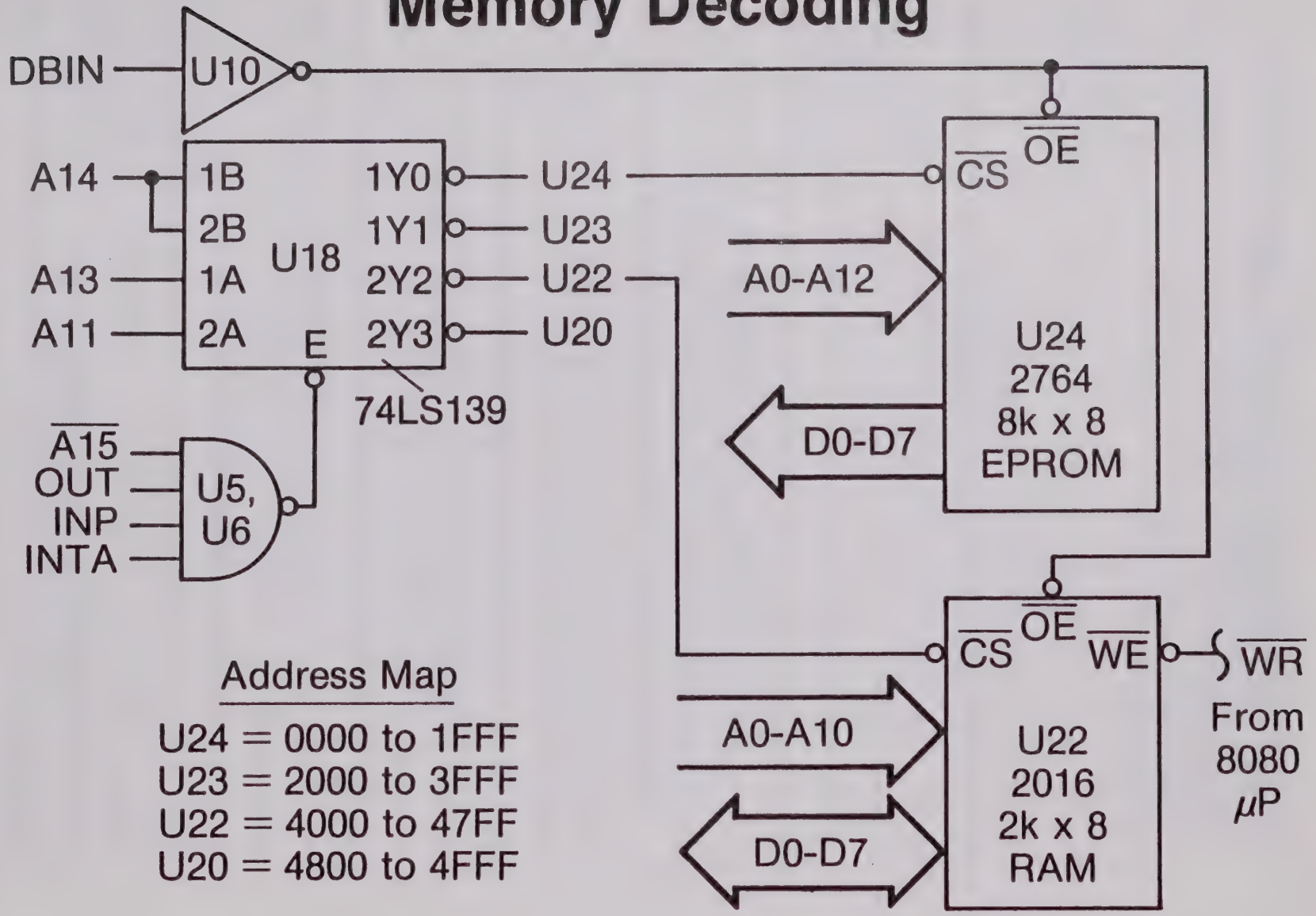

Address Map

U24 = 0000 to 1FFF
U23 = 2000 to 3FFF
U22 = 4000 to 47FF
U20 = 4800 to 4FFF

Controller: selecting memory .

1. U18, 74ls139 decoder selects RAM and EPROM
2. enabled by U5 and U6 when A15 is low, OUT and INP are high, and INTA is high.
3. DBIN controls data output buffers.
4. data is bidirectional for RAM
5. data is output only from EPROMs
6. address map: RAM and ROM decoding addresses.

ACK Logic

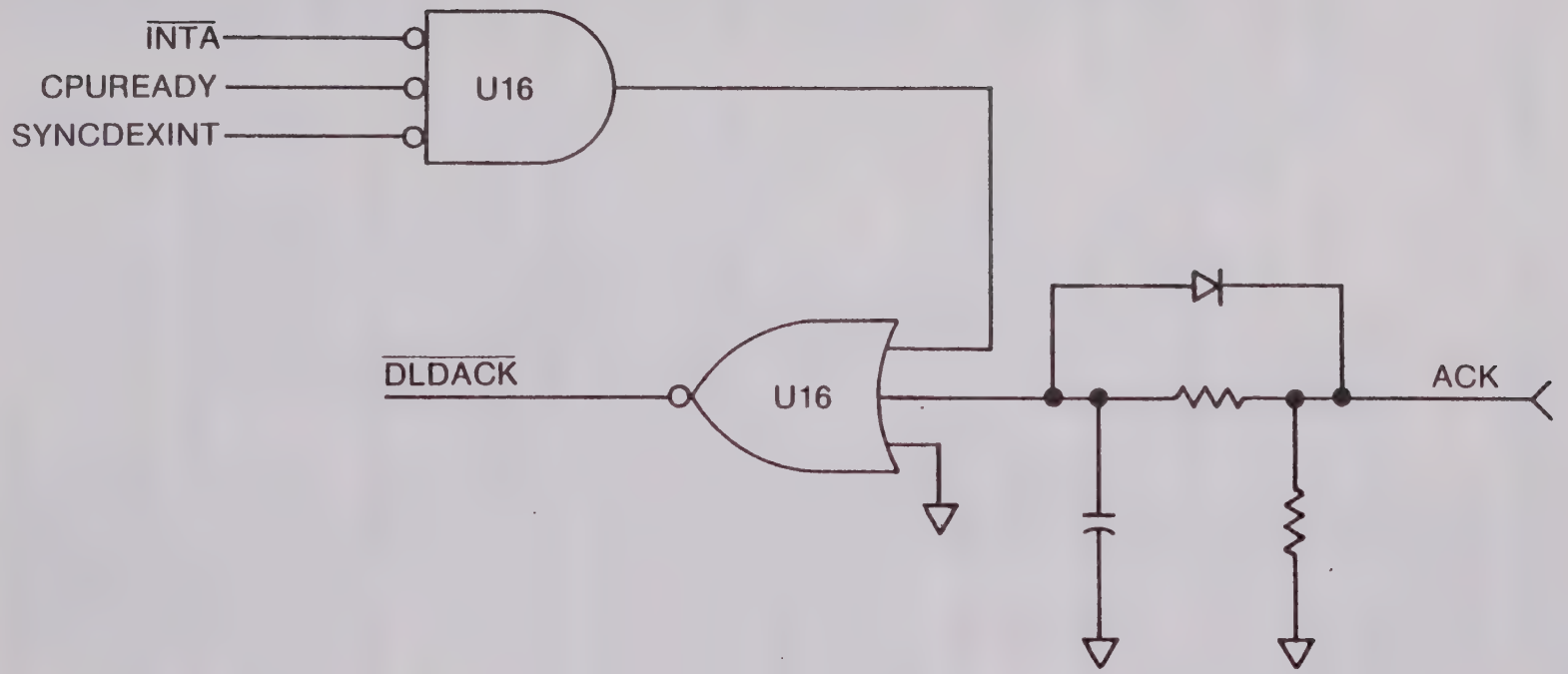

Controller: ACK input circuit

1. ACK, active high, must be received when a module is addressed to wake-up the 8080.
2. 1.6uS delay to insure ACK is high produces DLDACK, delayed ACK.

Front Panel Block Diagram

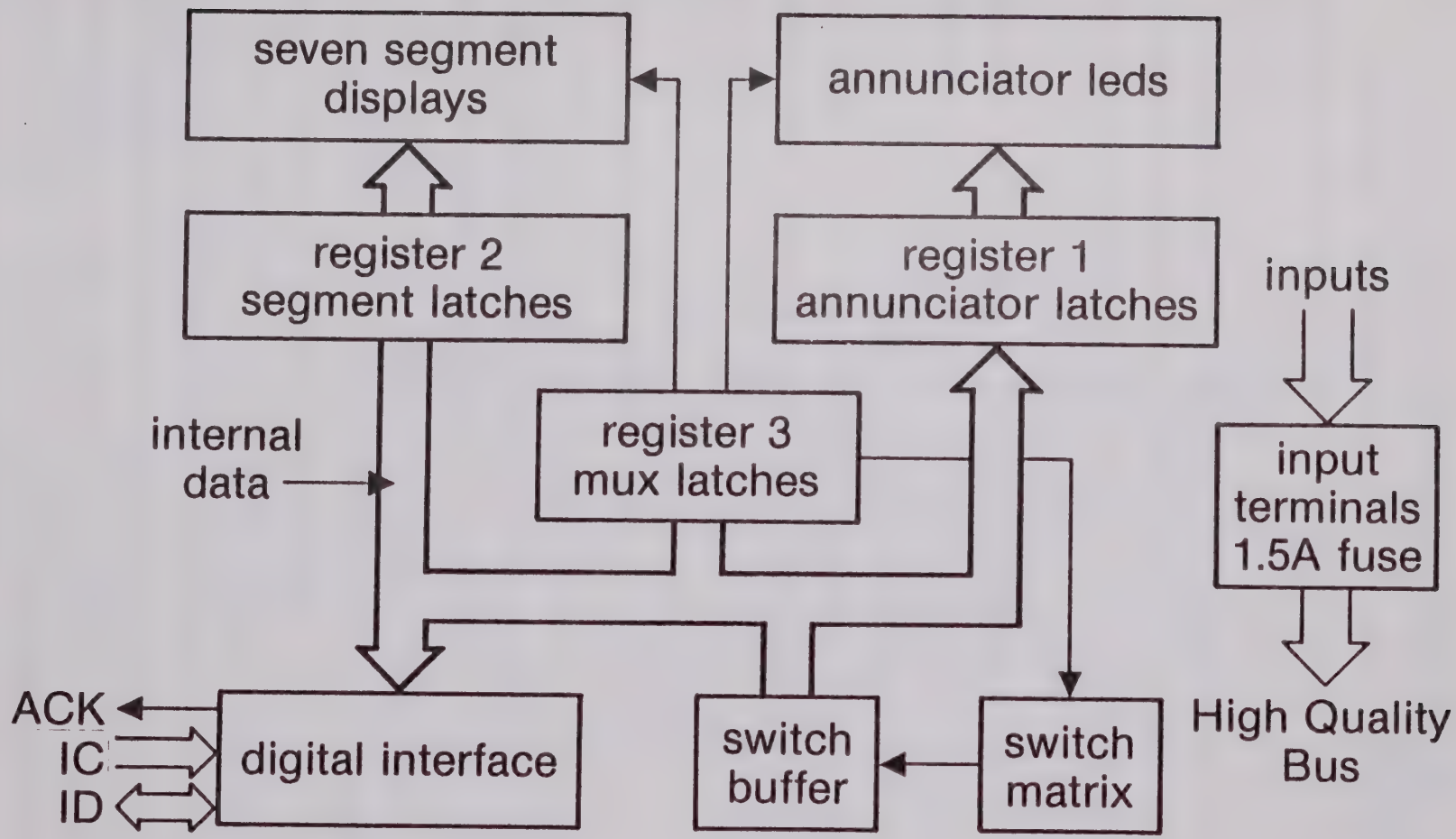

3.1.6/5.1.6.1 DPW/83

Front Panel

1. digital interface logic controls data transactions and provides ACK.
2. register 1, register 2, and register 3 enable the display's multiplexed LEDs.
3. keyboard is scanned once every display update using data from register 3.
4. input terminals route front panel inputs to the high Q bus.
5. additional display for to extended resolution on 8505/8506
6. no cal switch on 8505/8506 front panel.

Display Update Sequence

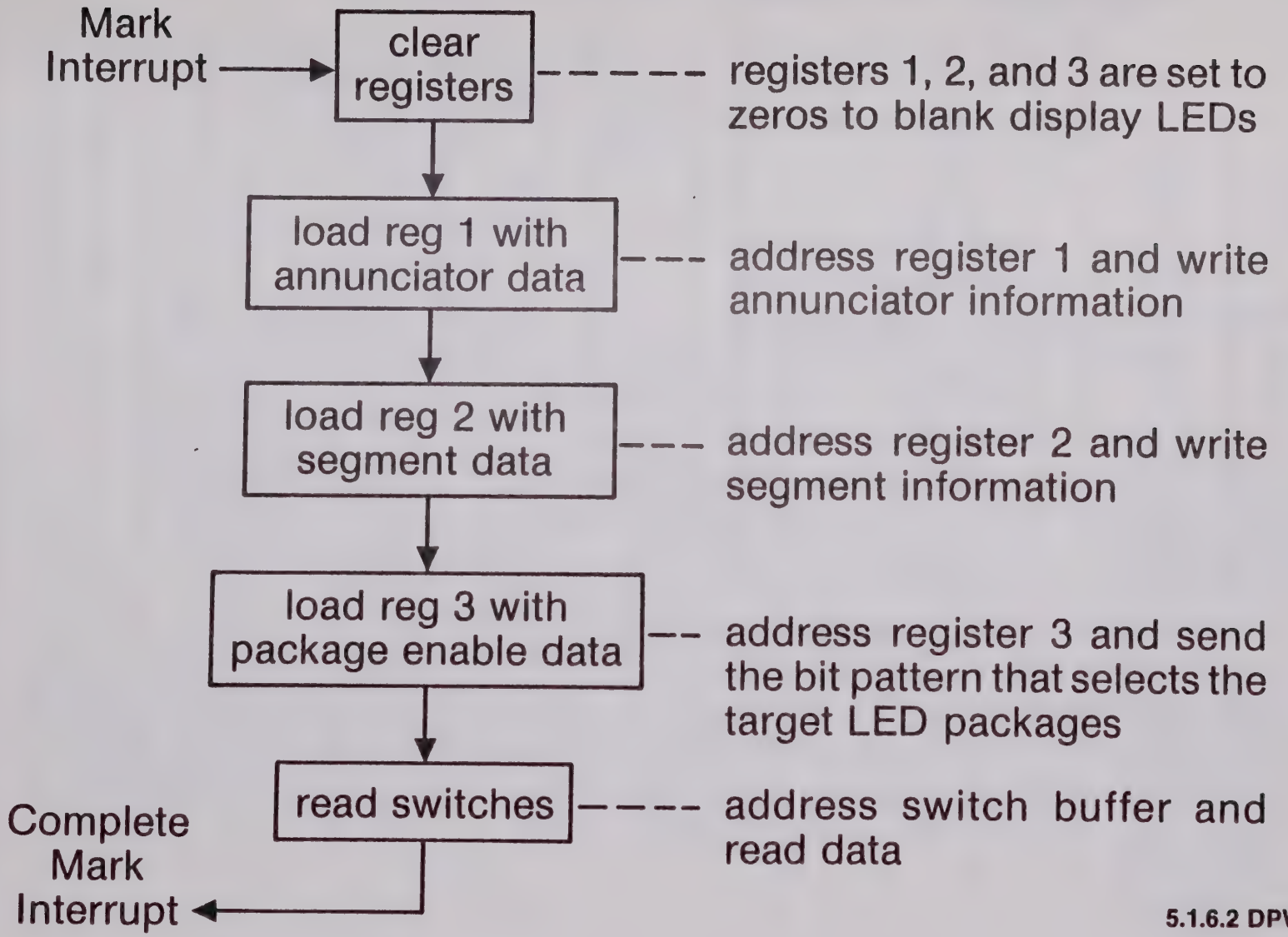

5.1.6.2 DPW/83

Front Panel: display sequence

1. enter from mark interrupt, controller's background software process.
2. clear all registers to blank all leds.
3. load annunciator data: set up register 1's address on control lines and load the register with the bit pattern that will turn on desired leds.
4. load digit data: set up register 2's address on control lines and load the register with the bit pattern that will turn on desired segments.
5. enable the display and key switch.
6. read the switch buffer.

SUMMARY: five main function blocks, four discrete addresses.

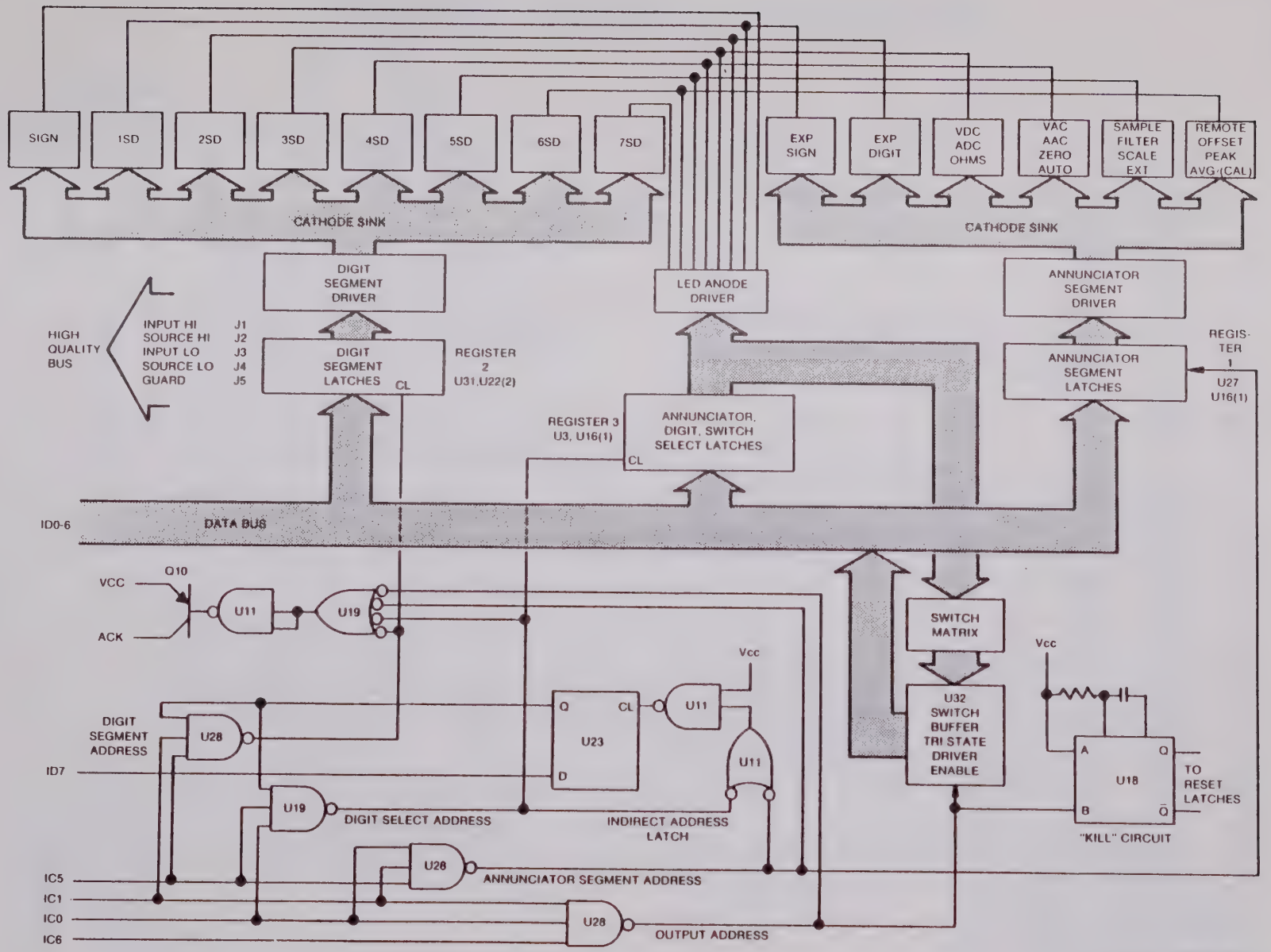
SIGN
1SD
2SD
3SD
4SD
5SD
6SD
7SD
EXP SIGN
EXP DIGIT
VDC ADC OHMS
VAC AAC ZERO AUTO
SAMPLE FILTER SCALE EXT
REMOTE OFFSET PEAK AVG (CAL)
CATHODE SINK
CATHODE SINK
DIGIT SEGMENT DRIVER
LED ANODE DRIVER
ANNUNCIATOR SEGMENT DRIVER
HIGH QUALITY BUS
INPUT HI J1
SOURCE HI J2
INPUT LO J3
SOURCE LO J4
GUARD J5
DIGIT SEGMENT LATCHES
CL
REGISTER 2 U31,U22(2)
REGISTER 3 U3, U16(1)
ANNUNCIATOR, DIGIT, SWITCH SELECT LATCHES
CL
ANNUNCIATOR SEGMENT LATCHES
REGISTER 1 U27 U16(1)
ID0-6
DATA BUS
VCC
Q10
ACK
U11
U19
SWITCH MATRIX
Vcc
U32 SWITCH BUFFER TRI STATE DRIVER ENABLE
Vcc
DIGIT SEGMENT ADDRESS
U28
ID7
Q
CL
U23
D
U11
U11
U19
DIGIT SELECT ADDRESS
INDIRECT ADDRESS LATCH
A
Q
U18
B
Q̄
TO RESET LATCHES
"KILL" CIRCUIT
U28
ANNUNCIATOR SEGMENT ADDRESS
IC5
IC1
IC0
IC6
U28
OUTPUT ADDRESS

3.1.6.2 DPW/83

Front Panel: block diagram/schematic
Sheet 1, page 8-6
1. displays: U4 through U10, U12 and 13, bussed and multiplexed.
2. annunciators: U14, 15, 24, and 26; bussed and multiplexed.
3. transistor drivers for leds on left side.
Sheet 2, page 8-7
4. input bus terminals, f1 current fuse.
5. reg 2, segment latches: U31, (74c174, hex d flip flop) and U22, (4013, dual d flip flop).
6. reg 1, annunciator latches: U27, (74c174) and U16a, (4013).
7. reg 3, mux latches: U3, (74c174) and U16b, (4013).
8. switch buffer and matrix: U32, (4503, hex tri-state buffer); switches and pull-up resistors.
9. digital interface: control line decoding, data lines, and ACK transistor Q10.

DC Signal Conditioner Block Diagram

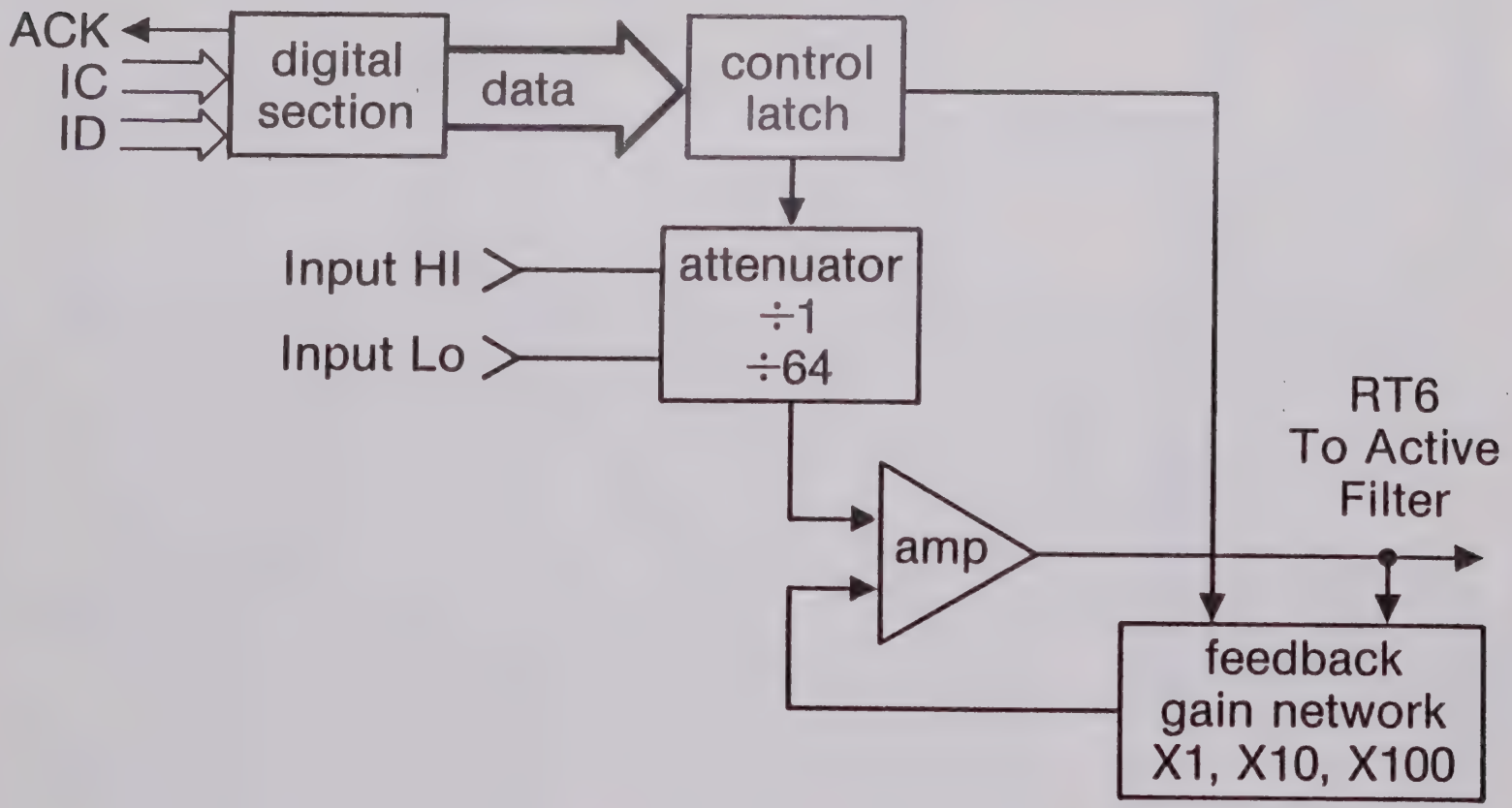

3.1.7/5.1.3 DPW/83

DC Signal Conditioner

1. digital interface logic accepts data and returns ACK.
2. inputs from high Q bus, (dc volts) and RT1/RT3, (ohms, current, etc.).
3. attenuator divide inputs by 1 or 64.
4. selectable amp gains of x1, x8, x64 for the 8500/8502 and x1, x10, x100 for 8505/8506.
5. same as 8502 except feedback/gain resistors.

Conditioner Signal Flow

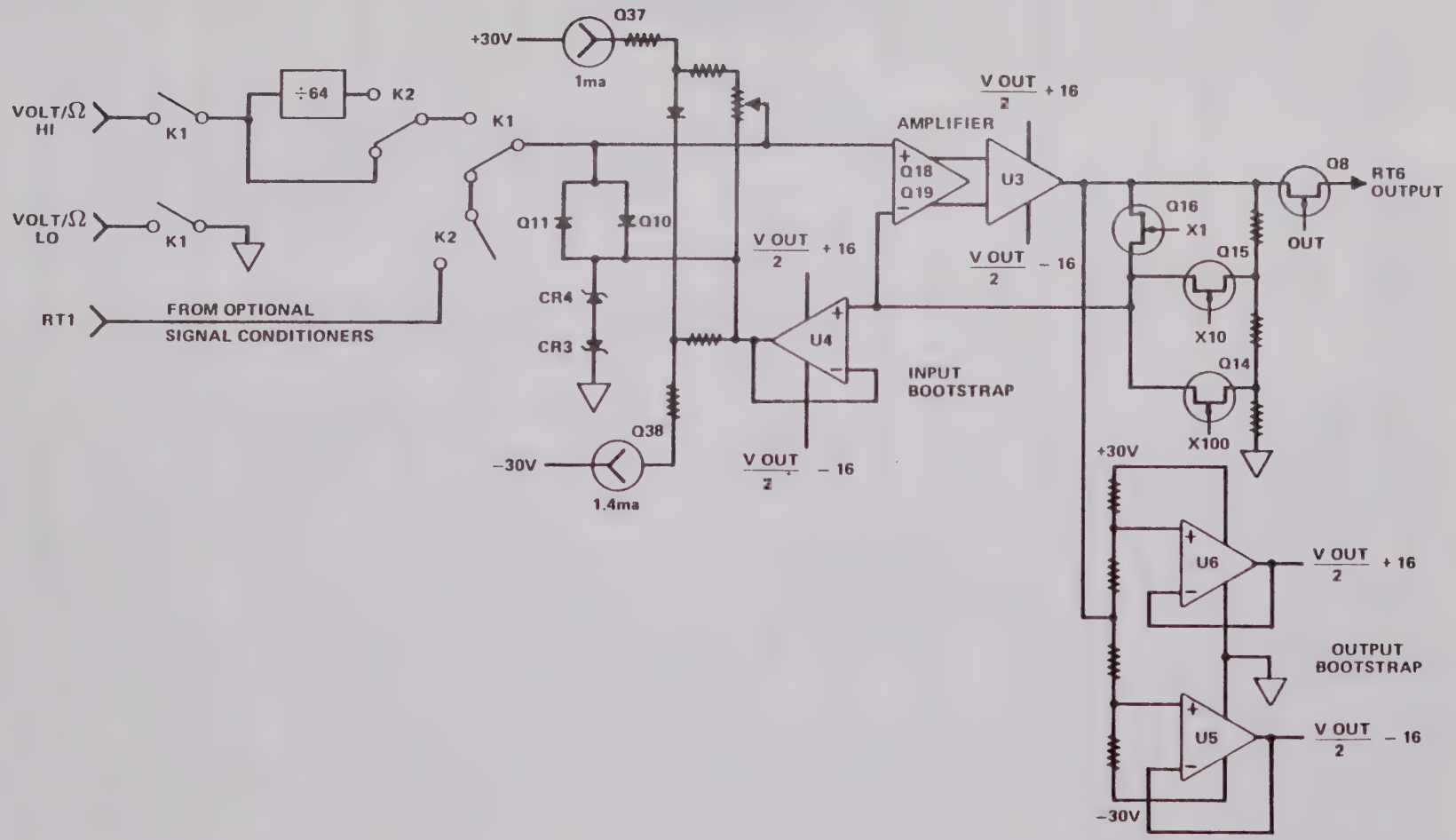

5.1.3.2 DPW/83

DC Signal Conditioner: Signal flow

1. inputs from HI/LO terminals or RT1 selected by K1/K2.
2. attenuation selected by K1/K2.
3. input protection provided by Q10, Q11, CR3, and CR4.
4. Q18/Q19 are biased by constant current generators Q37 and Q38, and by bootstrap follower U4.
5. U3 and U4 are biased by U5/U6 to +/-16V of input voltage.

DC signal conditioner schematic, page 8-23:

6. schematic errors: 8505/8506 x1, x10, x100; binding post chart.

Active Filter Block Diagram

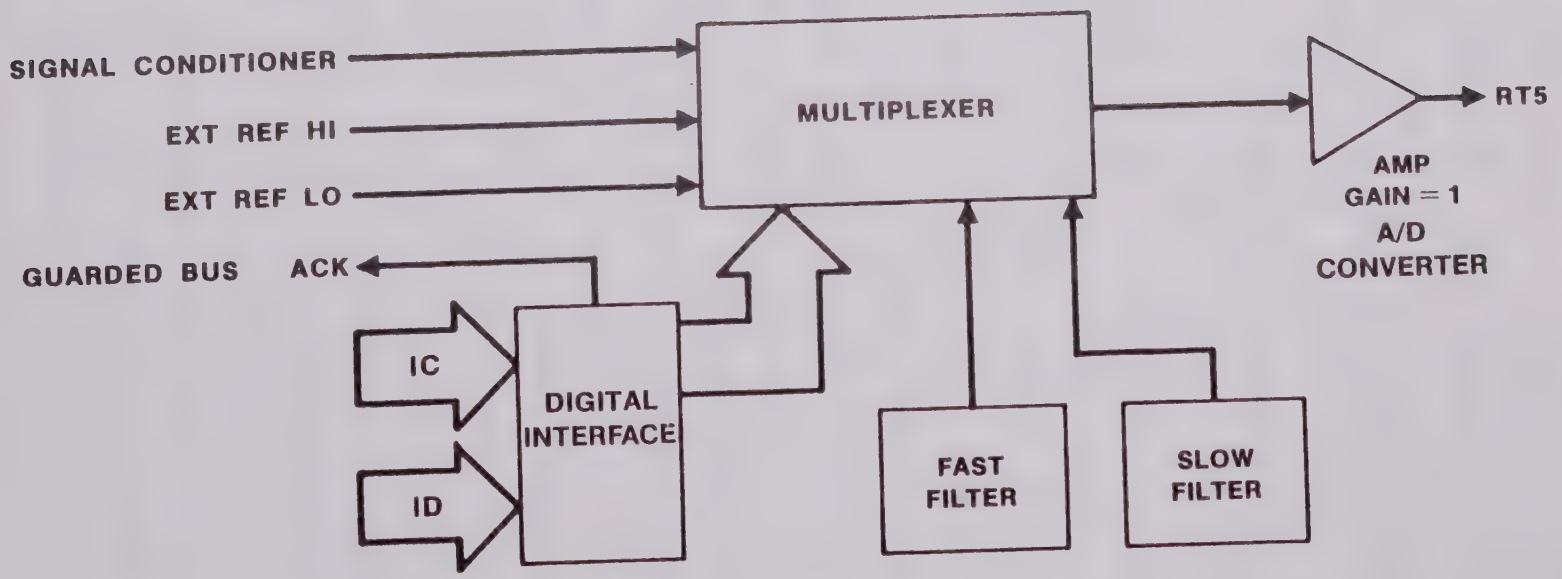

3.1.8/5.1.4.1 DPW/83

Active Filter

1. digital interface logic controls the mux, filters, and returns ACK.
2. filter's output is routed to the A/D on RT5.
3. external reference inputs are switched in by FETs.
5. fast and slow filters are low pass bessel.
6. buffer amp bootstrapped, superbeta.

relate block to schematic:

1. digital interface: ID0 - ID5; IC1, IC3, and IC4; U1 input data latch; ACK Q13; level shifters Q1 - Q12.
2. inputs on RT6 and XREF HI, XREF LOW to fet multiplexer.
3. U3, fast filter Y and U4, slow filter Z.
4. output buffer amp: superbeta Q27 and high voltage op-amp U5.
5. bootstrapping and constant currents from Q26 and Q30.

A/D Converter Block Diagram

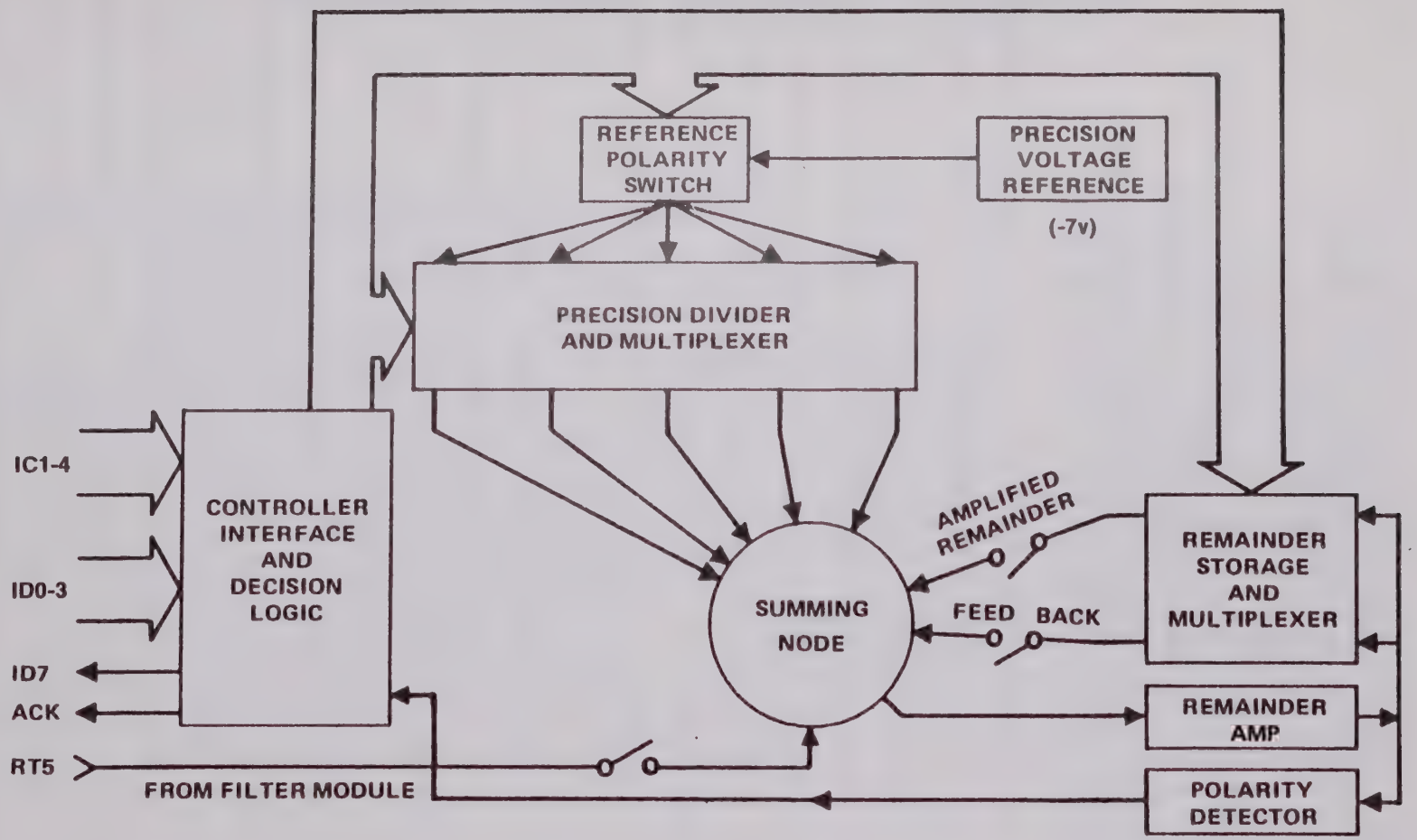

3.1.9/5.1.5.1 DPW/83

A/D Block Diagram

1. digital interface sets D/A ladder, remainder amps, and reads polarity of input on ID7
2. input voltage from the active filter module on RT5.
3. the A/D process is similar to successive approximation technique in that precision currents are added to the summing node to approximate the input value.
4. the approximation's remainder is multiplied by 16 and stored for the next cycle.
5. the process repeats 4 more times using the approximation's stored remainder as the new input.

5 Bit Successive Approximation: Voltage A/D

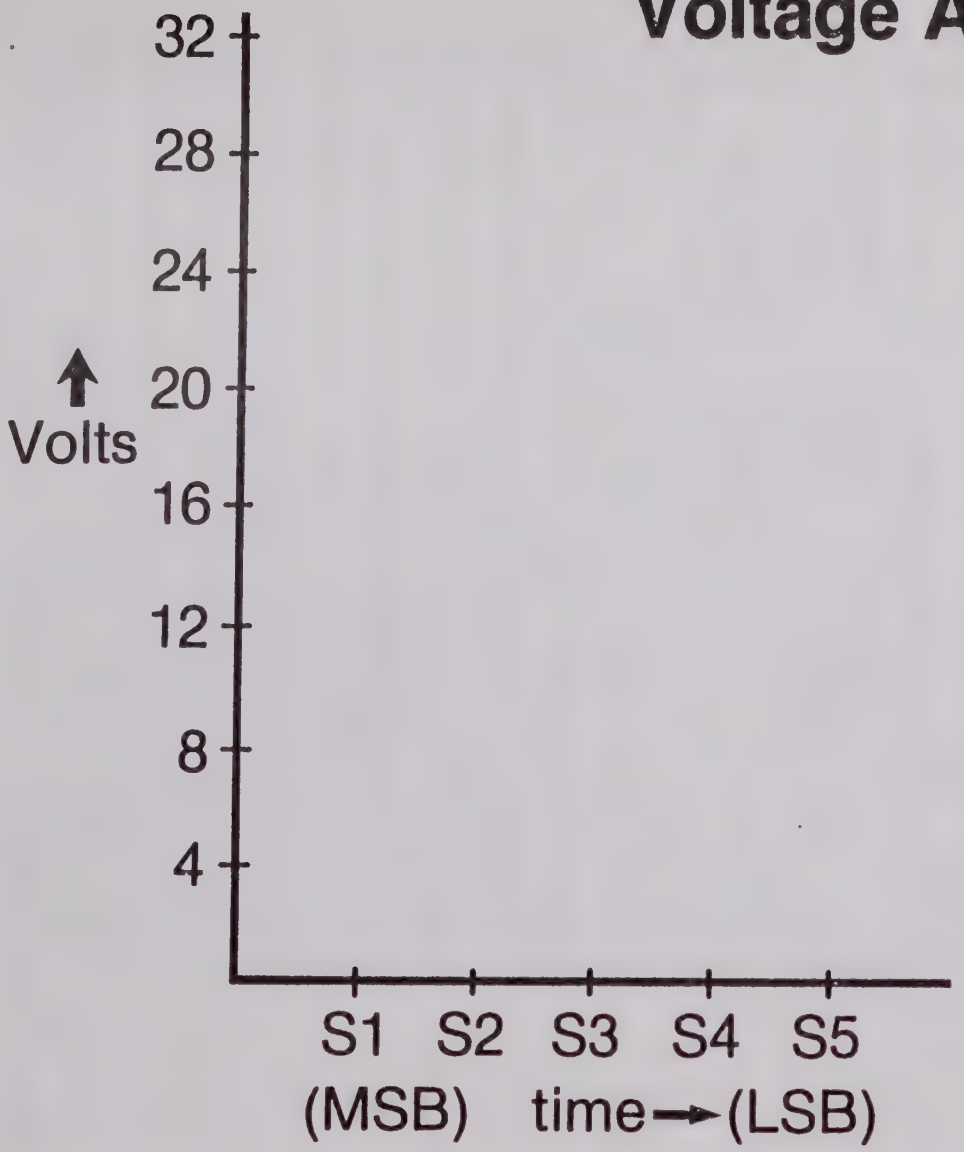

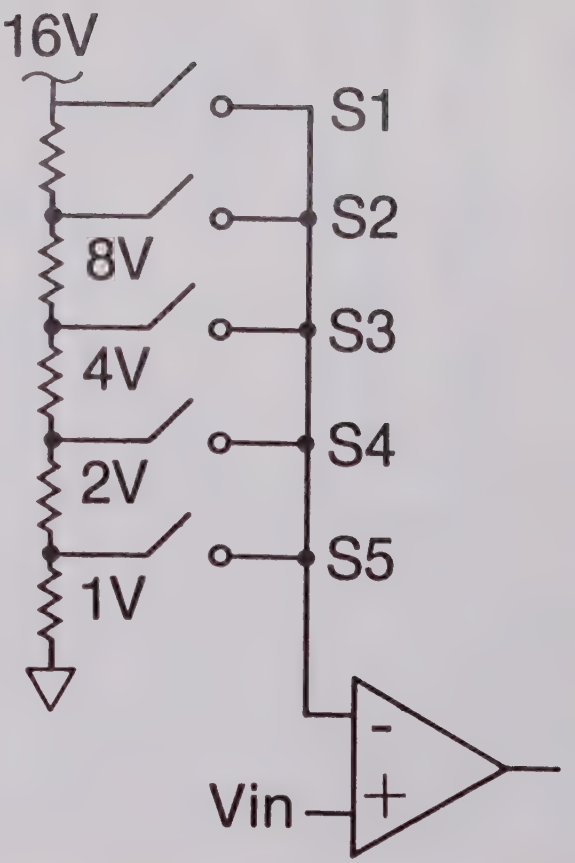

5.1.5.1.1 DPW/83

5 Bit Successive Approximation

1. reference voltages are applied in succession to the inverting side of a comparator.
2. if the polarity changes, the reference voltage is retracted.
3. the process is repeated for all five bits while recording the bit pattern for each decision.
4. walk through the process and collect a bit pattern using 17.5V as an input.

Current Switching: A/D

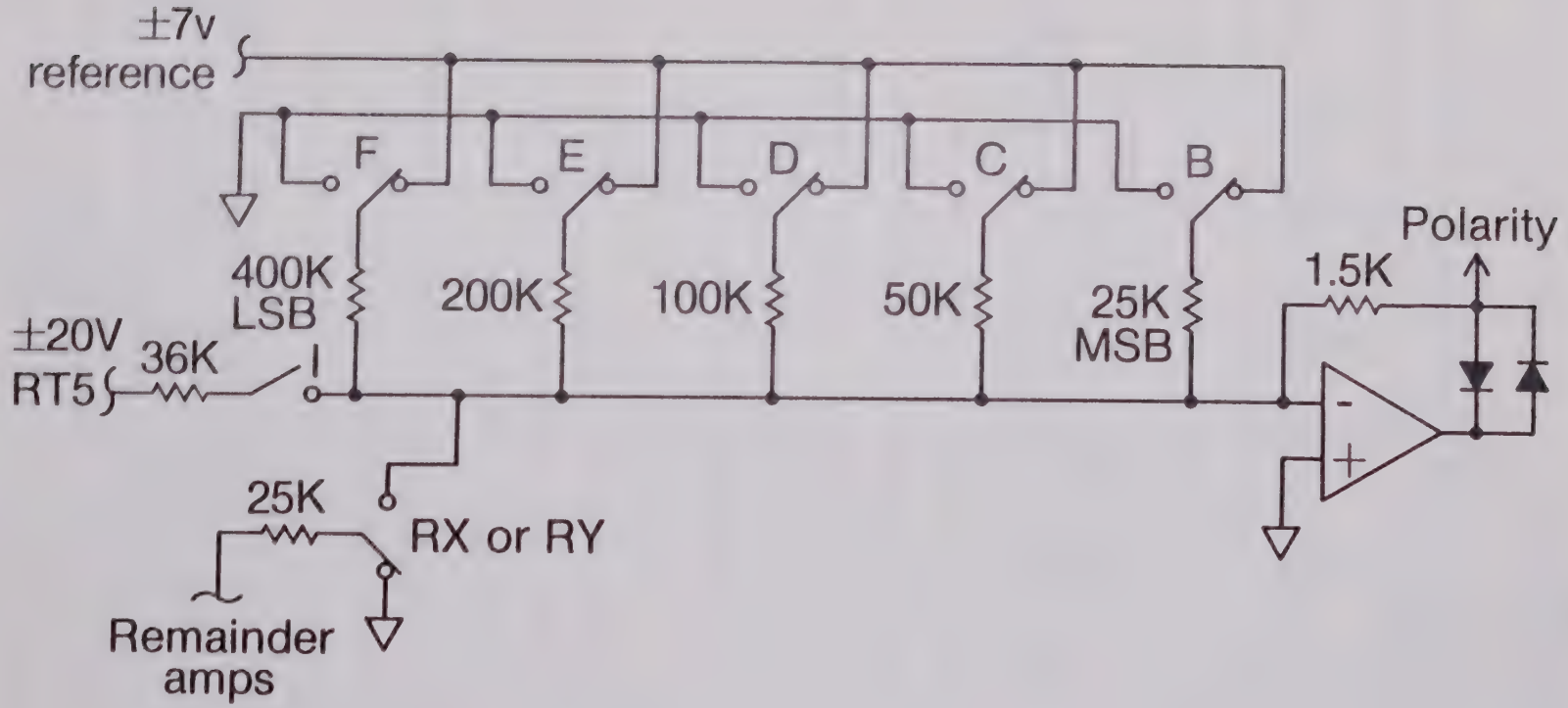

5.1.5.1.2 DPW/83

Current Switching Method

1. a stable voltage and precision resistors form the five current sources.
2. switches F, E, D, C, and B enable D/A currents.
3. the input voltage from RT5 is converted to a +/-560uA current.
4. five approximations are made and the polarity bit pattern is recorded.
5. remainder voltages are multiplied and stored in remainder channels RX and RY.

A/D Converter Timing Diagram

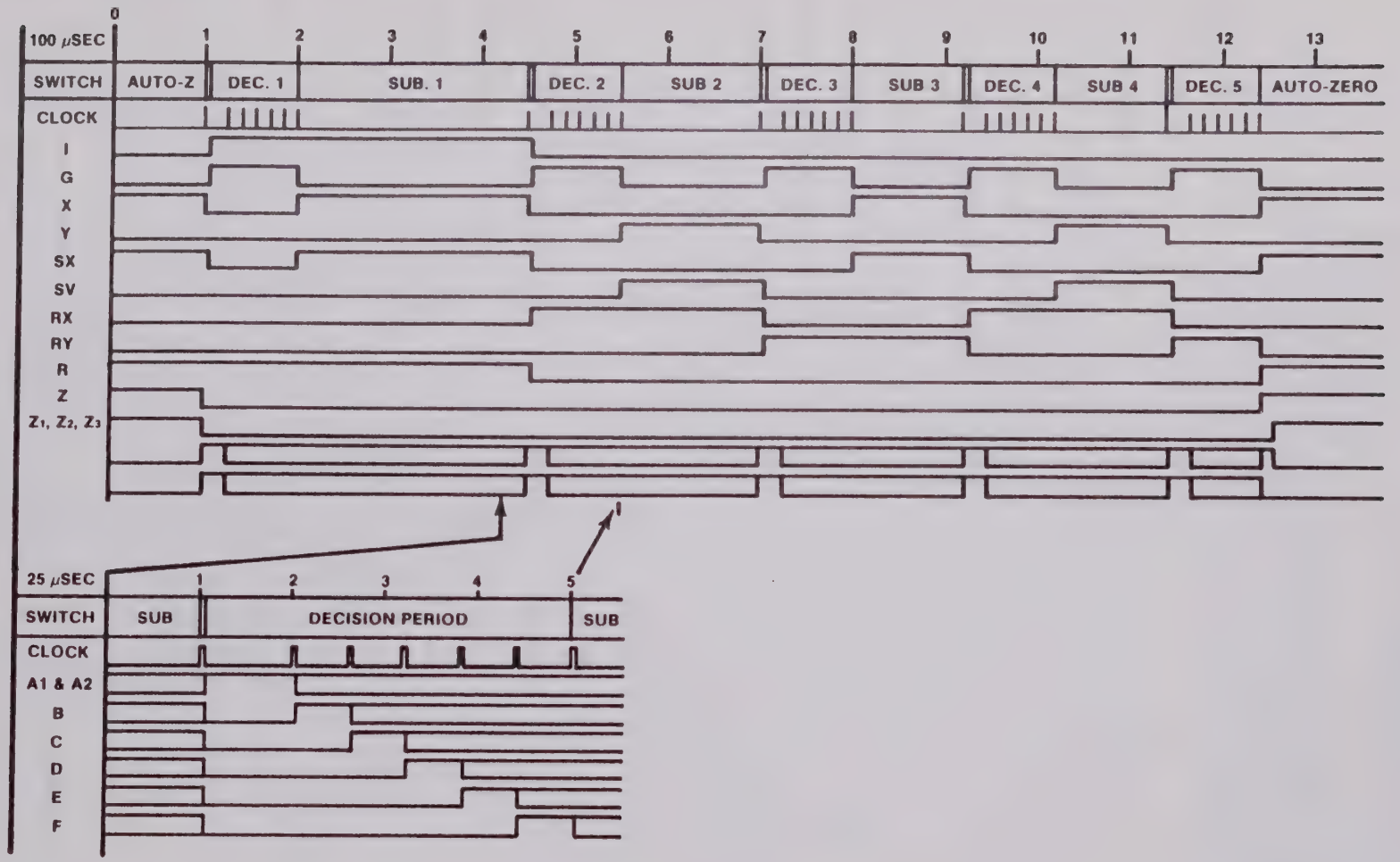

5.1.5.2.2a DPW/83

A/D Converter: secondary block diagrams

timing diagram:

1. the five decision/subtraction periods each have seven clock pulses, first to determine polarity, then the five approximations, then to set the remainder mode.
2. the process starts and ends with auto zero.
3. clock is generated when the controller addresses the A/D producing ACK.
4. switch identifiers relate to the block diagram.

block diagram:

1. I input on first cycle, G polarity feedback for decision periods, and X/RX or Y/RY for enabling the X16 gain path and remainder storage.
2. -7V reference U1, U2, and U3, can be measured at TP 7.
3. reference switch circuitry provides inverting and noninverting configurations for Q9/U4; output can be measured on TP 5.
4. D/A ladder network: a bit value is turned when a FET enables a precision resistor to the summing node.
5. the input voltage at TP 4 is converted to current by Rin.
6. the polarity is sensed by Q28, latch by U6, and gated to ID7 by U5.
7. the digital control logic includes a ring counter for controlling the d/a ladder through conditional shift registers.

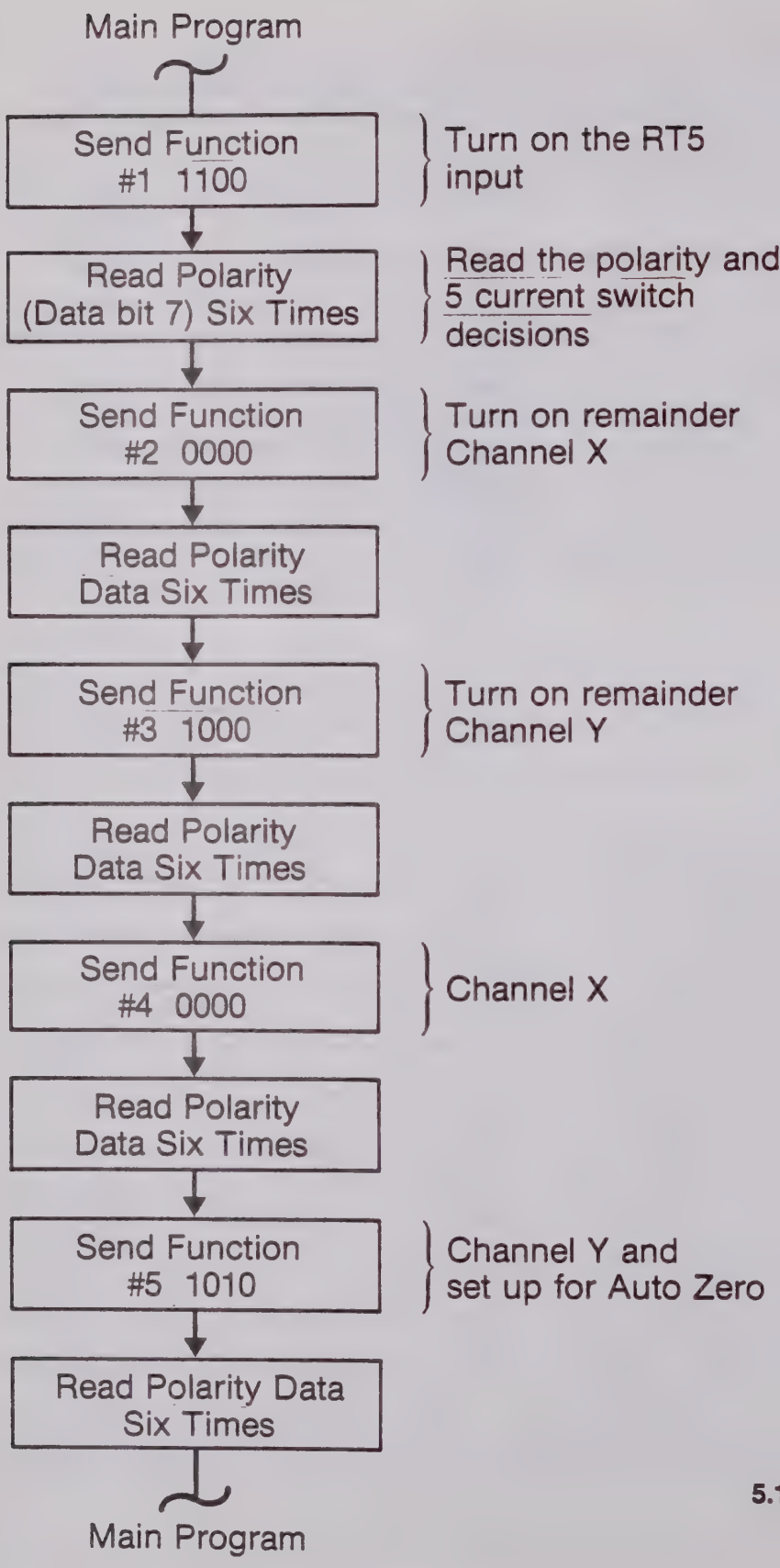
Main Program
Send Function #1 1100
Turn on the RT5 input
Read Polarity (Data bit 7) Six Times
Read the polarity and 5 current switch decisions
Send Function #2 0000
Turn on remainder Channel X
Read Polarity Data Six Times
Send Function #3 1000
Turn on remainder Channel Y
Read Polarity Data Six Times
Send Function #4 0000
Channel X
Read Polarity Data Six Times
Send Function #5 1010
Channel Y and set up for Auto Zero
Read Polarity Data Six Times
Main Program

5.1.5.4 DPW/83

A/D Digital Section: Flow Chart

1. the controller sends functions and read polarities from the A/D.
2. the functions include: turning on the RT5 input, enabling x and y amps, and setting up for auto zero periods.
3. functions are addressed by combining ID0 - ID3 with interface control lines.
4. data is latched when the controller retracts the IC lines.

A/D Converter Block Diagram

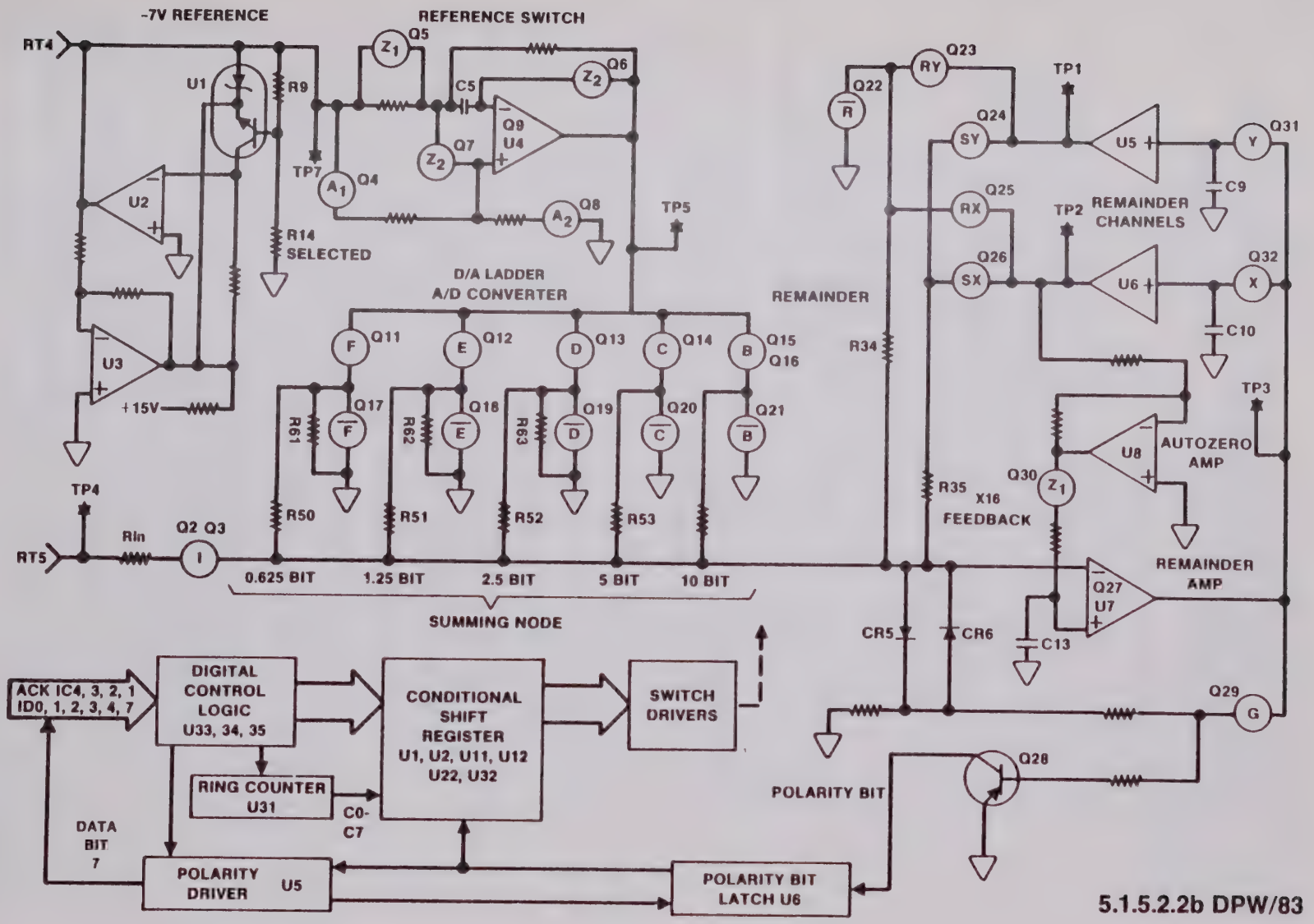

5.1.5.2.2b DPW/83

8500 A/D Converter: schematic

1. digital control logic: sheet 2; data inputs, data 7 output, control line inputs, polarity latch buffers and level shifted fet switch drivers
2. switching voltage reference: sheet 1; reference U1 and U3; switching 9, U4
3. precision resistor network: d/a converter ladder R50 to R54
4. remainer and storage buffers: y and x channels U5 and U6
5. current node amp: Q27, u7
6. polarity detector: polarity transmitter Q28; high gain feedback CR5 and CR6

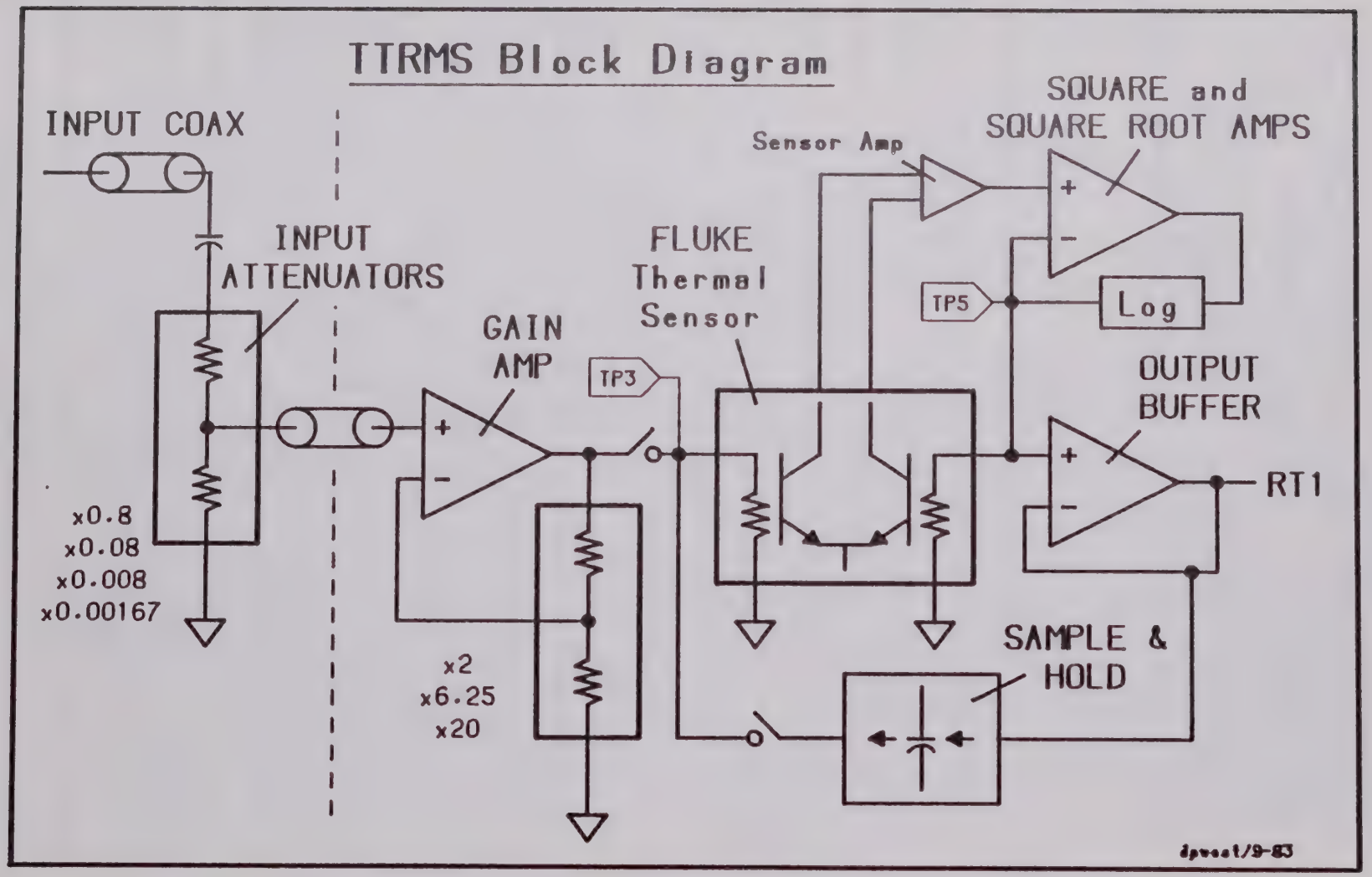
TTRMS Block Diagram
INPUT COAX
INPUT ATTENUATORS
x0.8
x0.08
x0.008
x0.00167
GAIN AMP
x2
x6.25
x20
TP3
FLUKE Thermal Sensor
Sensor Amp
SQUARE and SQUARE ROOT AMPS
TP5
Log
OUTPUT BUFFER
RT1
SAMPLE & HOLD
dpwat1/9-83

TTRMS Converter: 8506

1. four input attenuators
2. hibrid ranging amp
3. thermal sensor
4. output to dc signal conditioner
5. three measurement modes: normal, high acc, and enhanced
6. sample and hold section used for enhanced and high accuracy modes
7. square and square root amp for transient response
8. switching circuits
9. digital interface

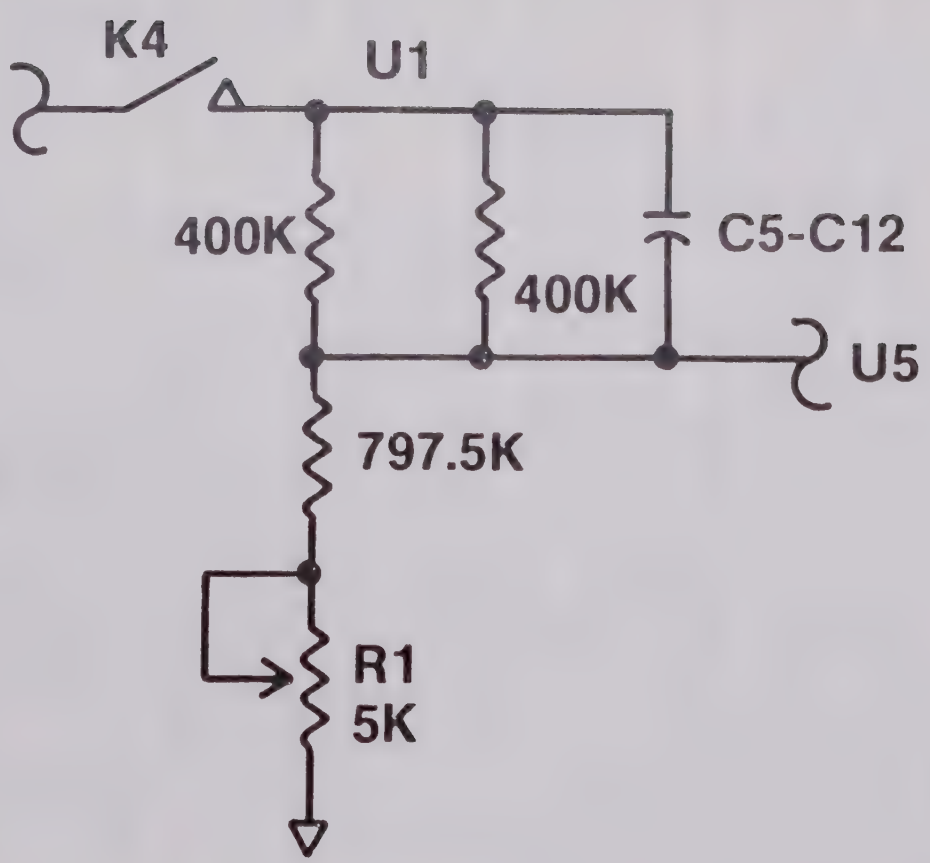
K4
U1
400K
400K
C5-C12
U5
797.5K
R1
5K

8506 TTRMS: attenuation

1. four paths: x0.8, x0.08, x0.008, and x0.00167
2. sandwich resistors designed to reduce effects of stray capacitance
2. fet hibrid switch selects attenuation path
3. coax feed back from amplifier card

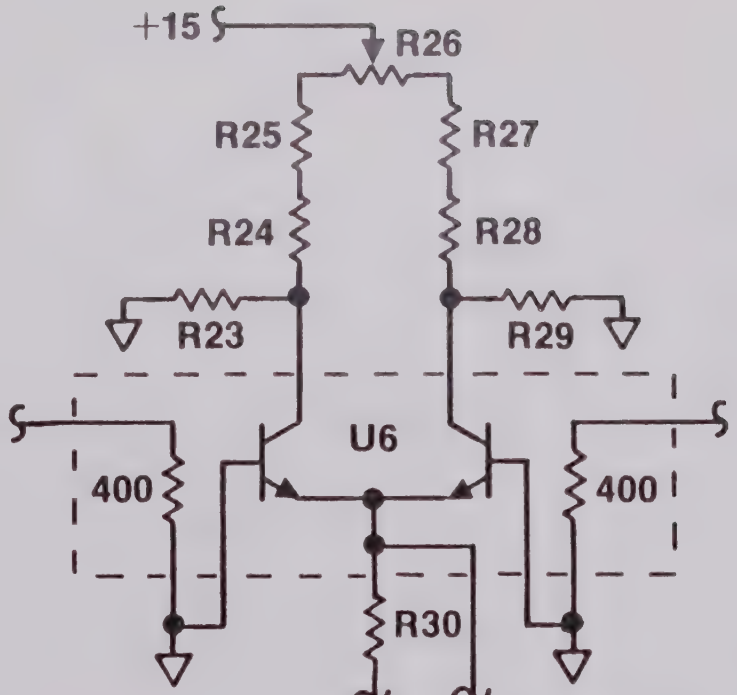
+15
R26
R25
R27
R24
R28
R23
R29
U6
400
400
R30
-15
OVERLOAD
PROTECTION (U5-6)

8506 TTRMS: schematic
sheet one, page 8-31
1. input coax cable
2. ac or dc coupled
3. input attenuators
4. fluke hibrid switches
5. digital interface

sheet two, page 8-33
1. input amp
2. hibrid gain amp
3. feedback networks
4. fluke thermal sensor
5. log and anti-log amp
6. output amp
7. sample and hold

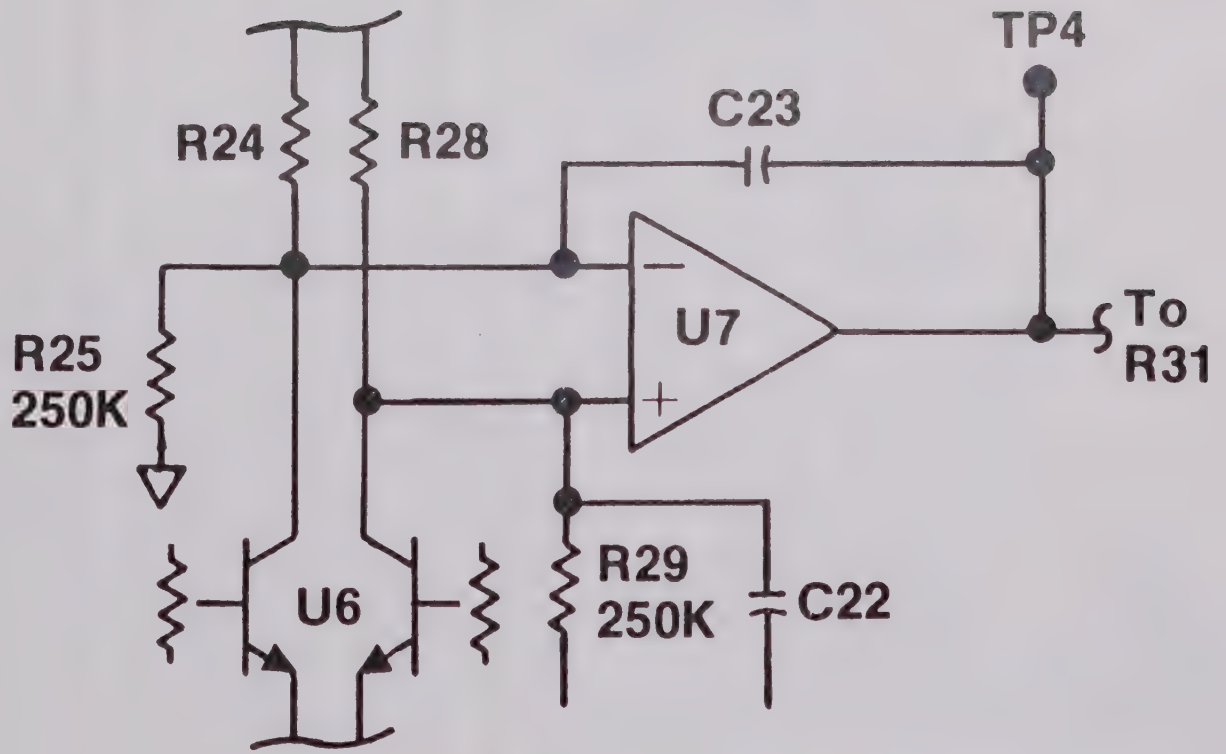
TP4
C23
R24
R28
U7
To
R31
R25
250K
U6
R29
250K
C22

8506 TTRMS: thermal sensor
1. 400 ohm resistive element
2. overheat protection
3. differential sense amp

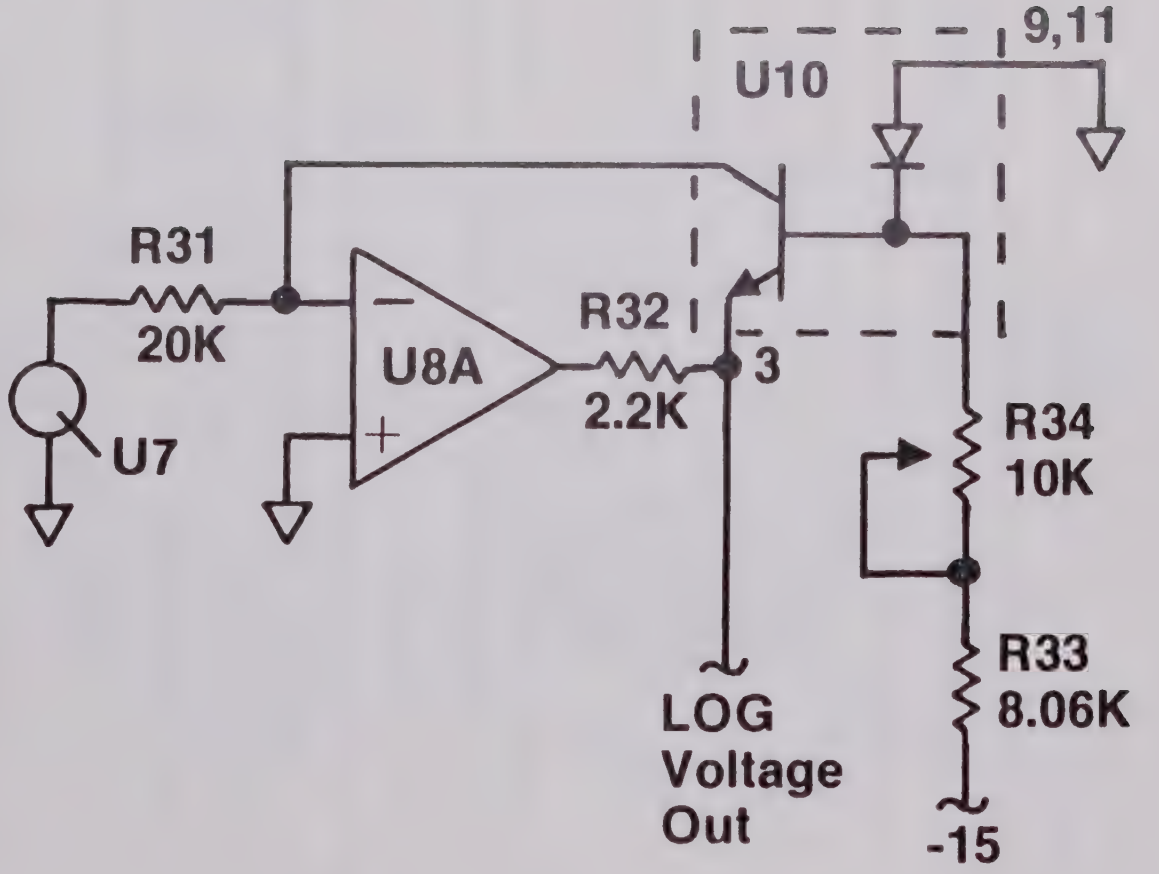
9,11
U10
R31
20K
U7
U8A
R32
2.2K
3
R34
10K
R33
8.06K
LOG
Voltage
Out
-15

8506 TTRMS: log and anti-log amp
1. current input/log voltage output
2. bias adjusted by R34
3. anti-log current input to U8B

AC/DC Averaging Converter

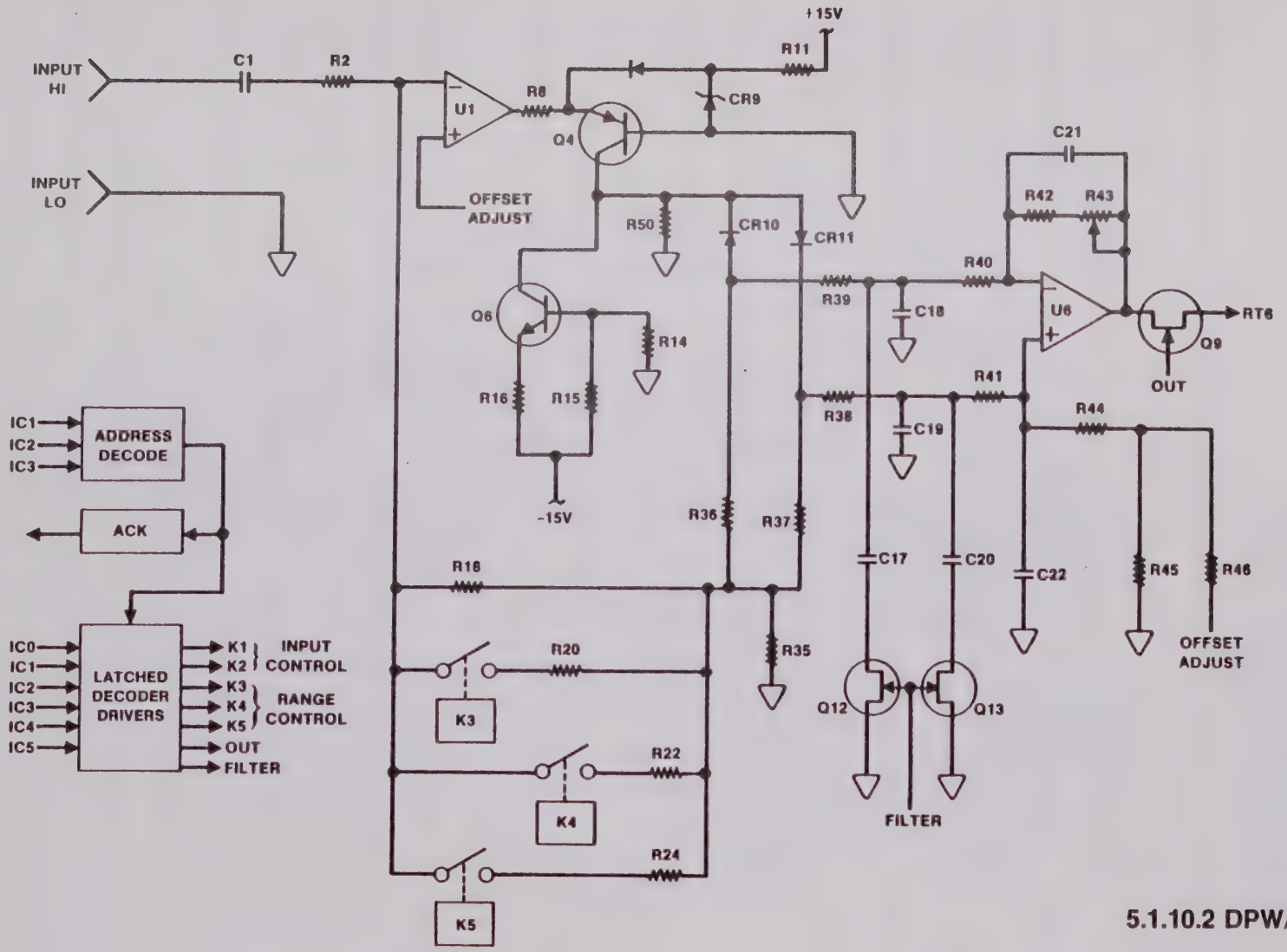

5.1.10.2 DPW/83

AC/DC averaging Converter: 8502/8505

1. inputs from high Q bus or current converter, RT1/RT3.
2. input voltage controls current amp.
3. signal is rectified, filtered, and measured by output diff amp set to a gain of 8X the average to RMS scaling factor of 1.11.
4. digital interface controls feedback, filters, and output to RT6.

AC/DC Averaging Converter Block Diagram

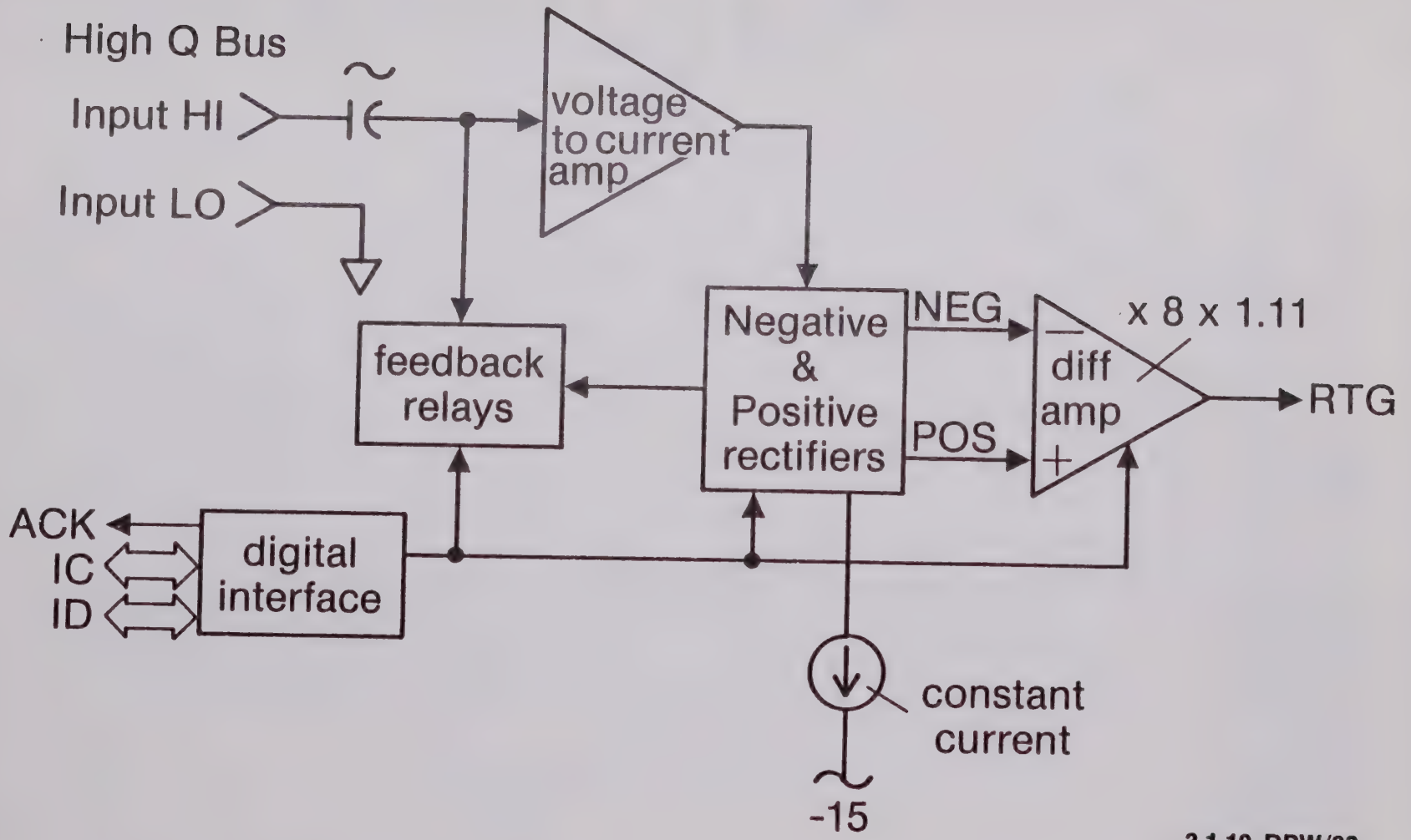

3.1.10 DPW/83

Average AC (-01): block diagram

1. U1, R8 and Q4 form a voltage to current amp.
2. relays enable the five ranges.
3. CR10 and CR11 rectify the buffered input signal.
4. U6 amplifies the rectified the output, R43 sets the gain.
5. output enabled by Q9 to RT6.
6. Q12 and Q13 switch in additional filtering.

Ohms Converter Block Diagram

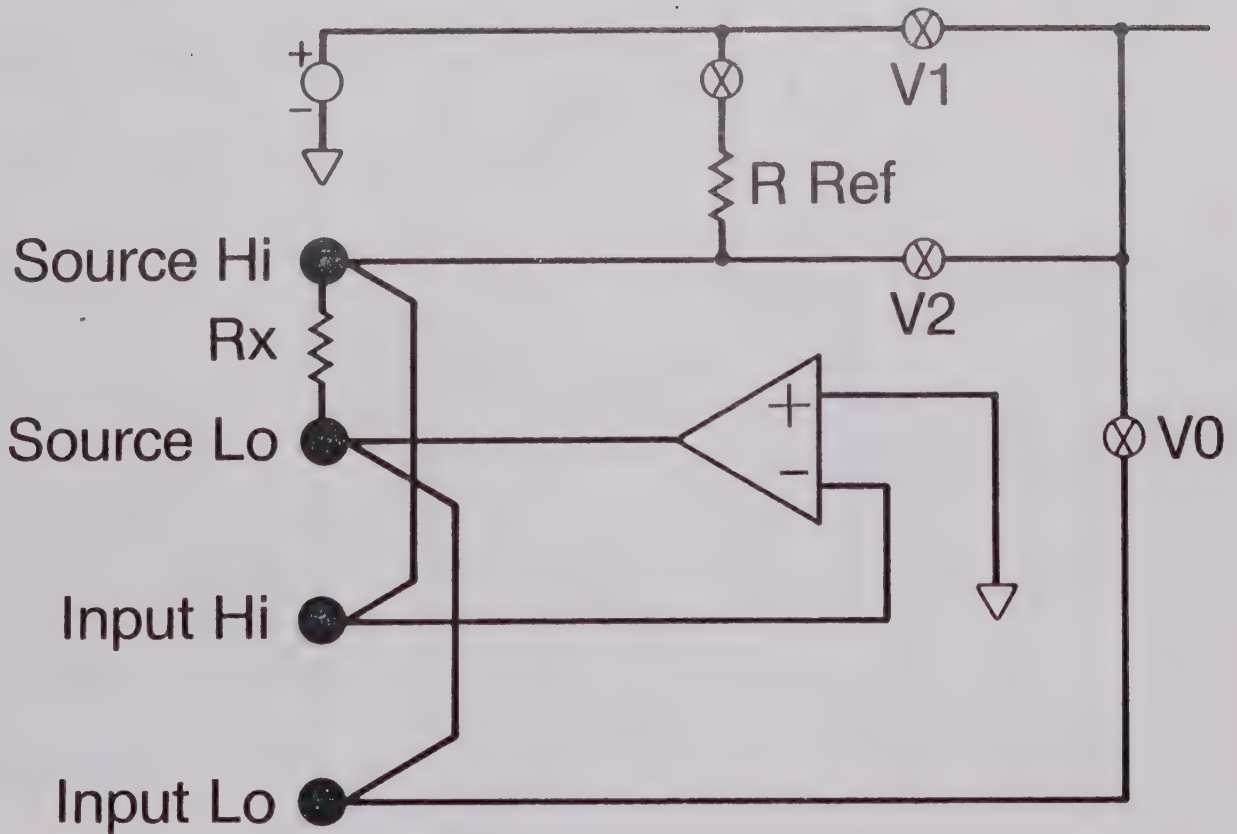

3.1.11.2/5.1.9.1 DPW/83

Ohms Converter: Block

1. voltage reference is used to create a precision current source.
2. Rx used as the feedback element of an inverting op-amp.
3. voltage senced at input HI and LO.
4. measurements taken from V0, V1, and V2.

Ohms Converter

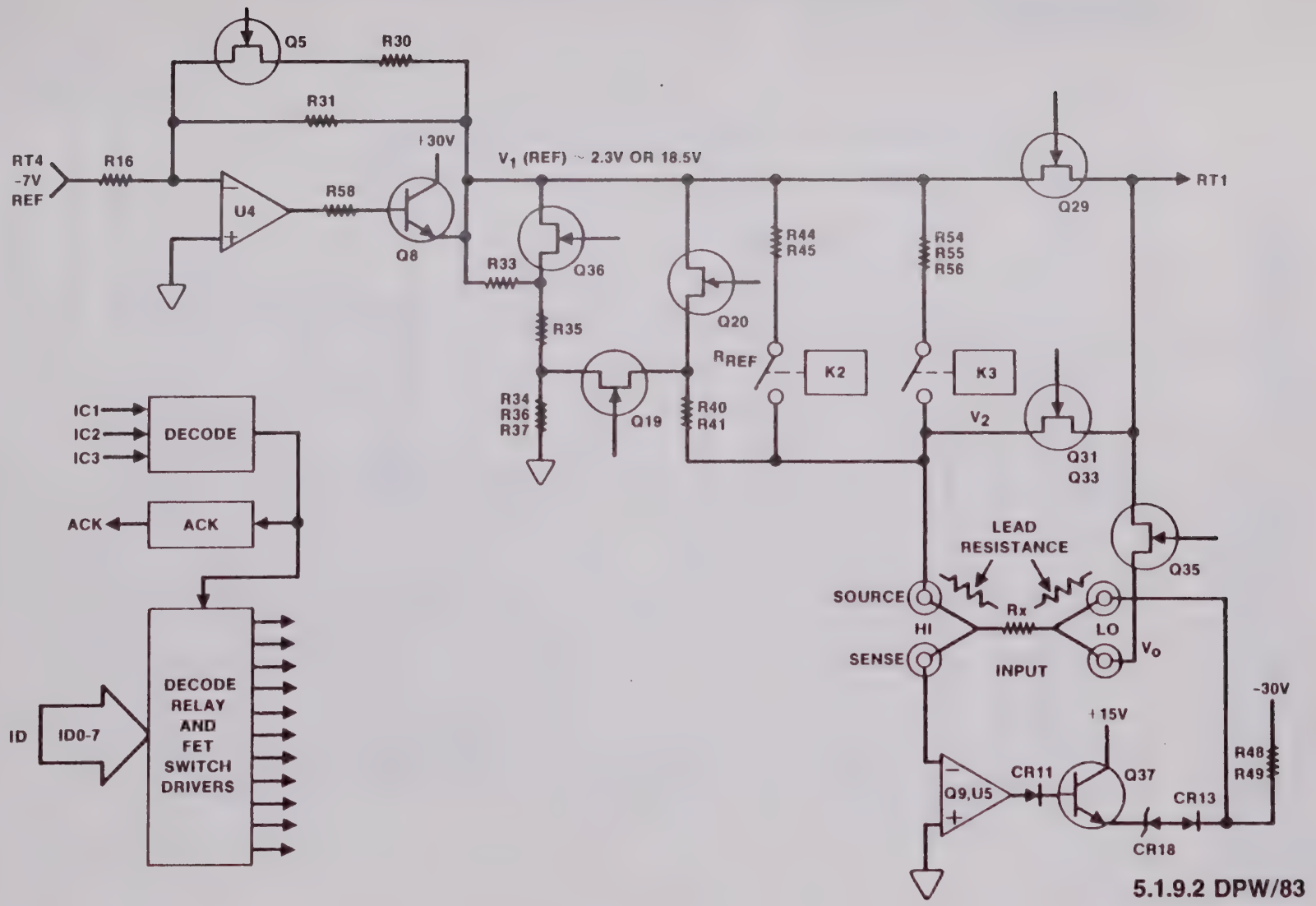

5.1.9.2 DPW/83

Ohms Converter: Signal Flow

1. RT4 -7v reference from A/D used for generating 2.3V and 18.5V references for the 8502, 1.86V and 18.5V for the 8505/8506.
2. U4 configured for two possible gains, Q8 provides current boost.
3. V1 ref measured when Q29 is turned on.
4. V2 measured in lower five ranges to determine lead resistance.
5. current to voltage amp: Q9, U5, Q37 uses Rx as it's feedback resistor.
6. V0 measured at input low
7. digital logic addresses card, selects currents and analog bus multiplex

Current Shunt

Mode A

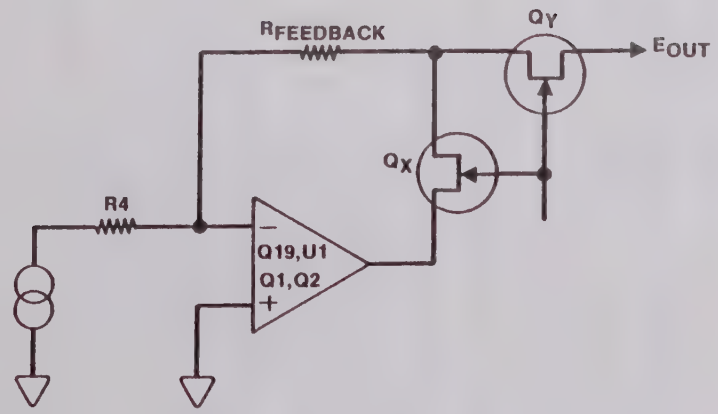

MODE A — 100 μA, 1 mA, 10 mA

Mode B

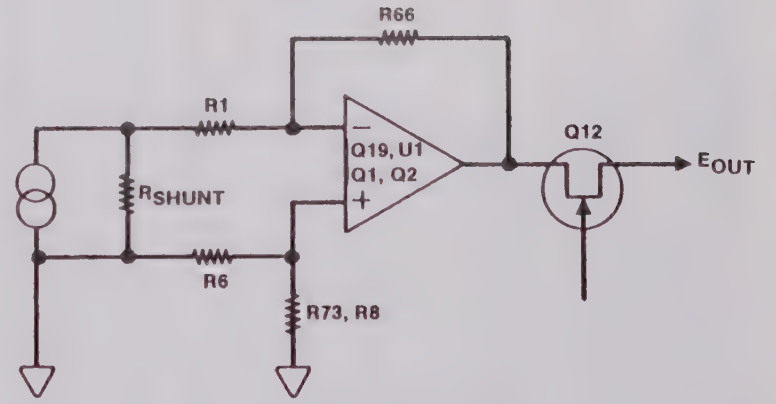

MODE B — 100 mA, 1A

3.1.12.1/5.1.8.1a DPW/83

Current Shunt: Mode A & B

mode B:

1. used for 100m and 1A ranges.
2. Rshunt sinks all input current.
3. voltage across Rshunt is measured by diff amp to determine the current.
4. ranged by two configurations of Rshunt, switched by relays.

mode A:

1. used for the 100u, 1m, and 10mA ranges.
2. current to voltage, inverting op-amp.
3. three values of Rfeedback form the ranges.

Current Shunt Block Diagram

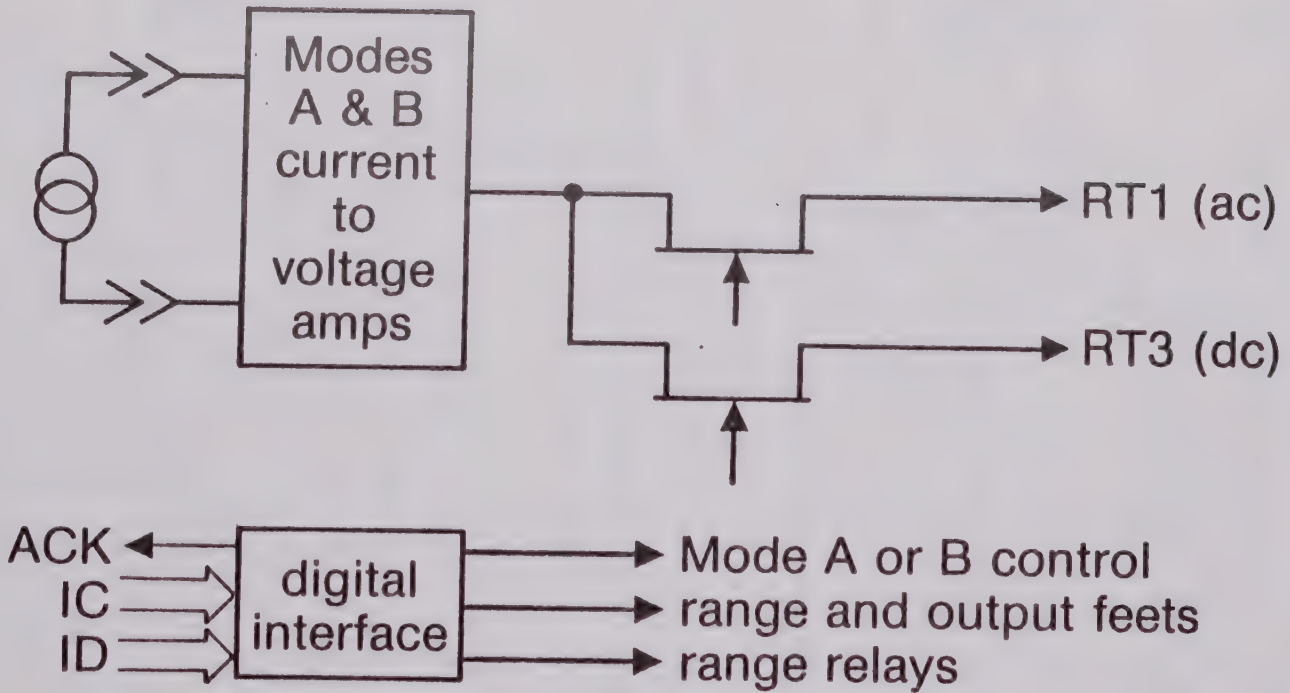

3.1.12.2/5.1.8.1b DPW/83

Current Shunt: Block Diagram

1. AC or DC input currents are routed to input amp, configured for mode A or B.
2. outputs to RT1 for AC, RT3 for DC.
4. interface data from the controller sets mode, range, input relays, and output FET.

8502 Cal Memory Block Diagram

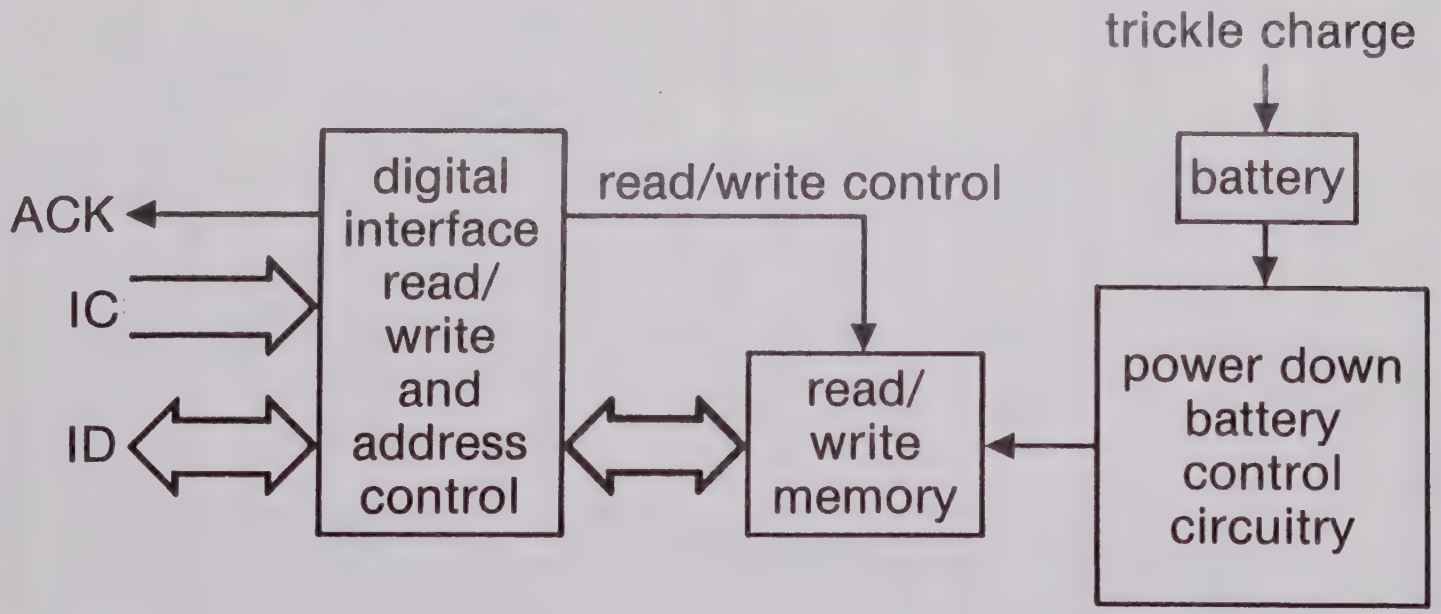

3.1.13/5.1.16.1 DPW/83

Cal memory: 8502

1. digital interface controls read/write and address.
2. RAMs are 256 x 4 bits.
3. battery charge circuit for ni-cads, omitted for lithiums.
4. 8505/8506 has cal memory on controller card.
4. battery control circuitry protects RAM data on power up and down.

Isolator Block Diagram

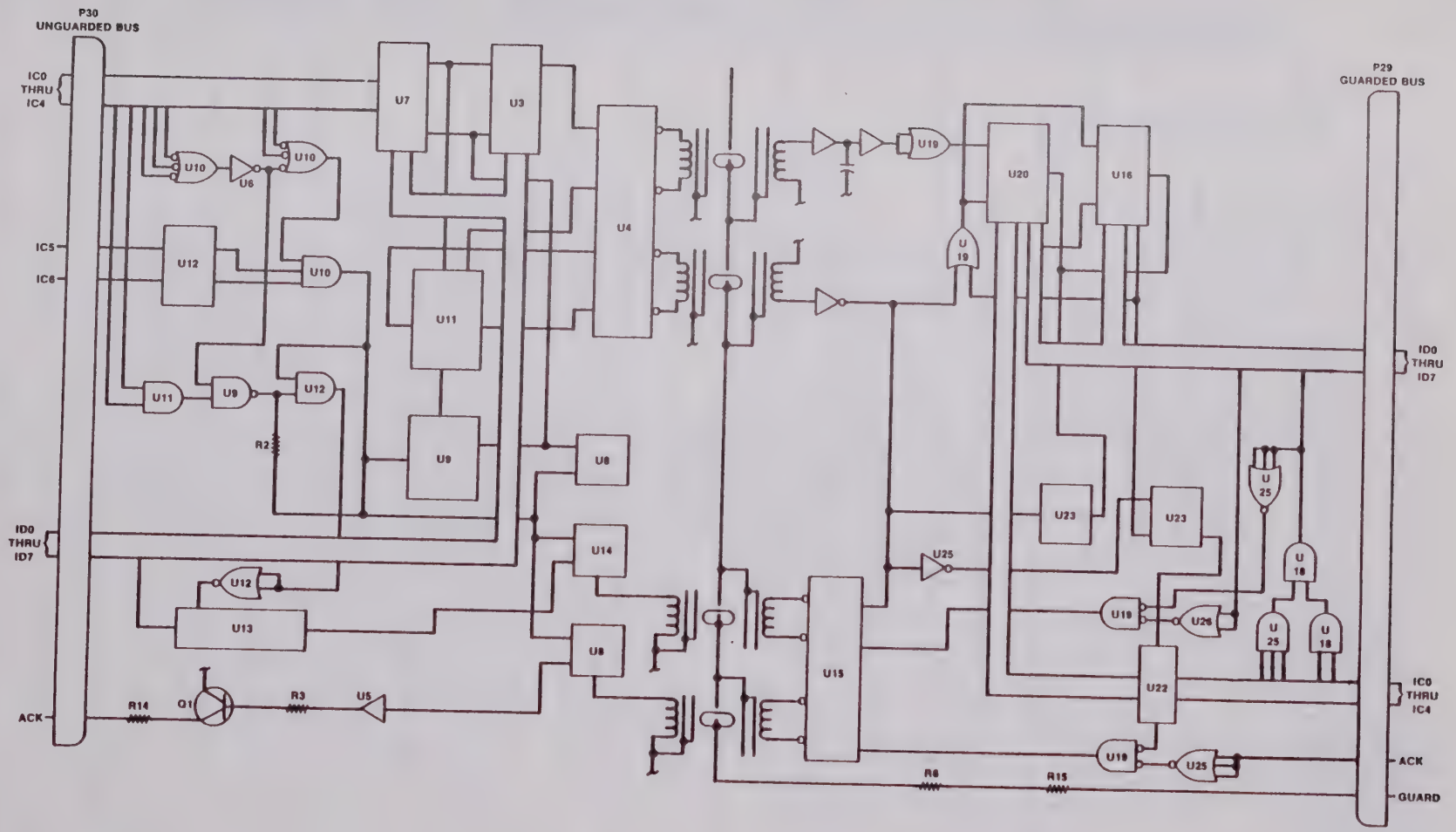

5.1.13.2 DPW/83

Isolator: Block & Schematic

1. must be installed in 8500/8502 when using remote programming devices and comes standard in 8505/8506.
2. interface data and control are sent from controller side to analog side across pulse transformer isolation guard.
3. data and address are converted from parallel to serial then back to parallel.
4. ACK sent back to controller across guard.
5. data bit 7 sent back to controller from A/D.
6. trigger input on the (-08A).

Schematic, page 608A-8.

1. external trigger input: U35 schmitt, U31, U13 to ID1, and Q2 interrupt; ID0 clears the trigger latch.
2. input buffers and shift registers: data U1, U2, U3; address U4, U5, U6, U7.
3. R1, C1, and U9 form the clock oscillator circuit, (about 6Mhz).
4. ACK returned to the controller through U12 and Q1.
5. isolation pulse xfmrs T1 - T4 shift data and address to the isolated side and are driven by U4.
6. T5 - T8 transfer the ACK signal and data bit 7 from the A/D.
7. U20 and U16 are the guarded shift registers.

True RMS Converter Block Diagram

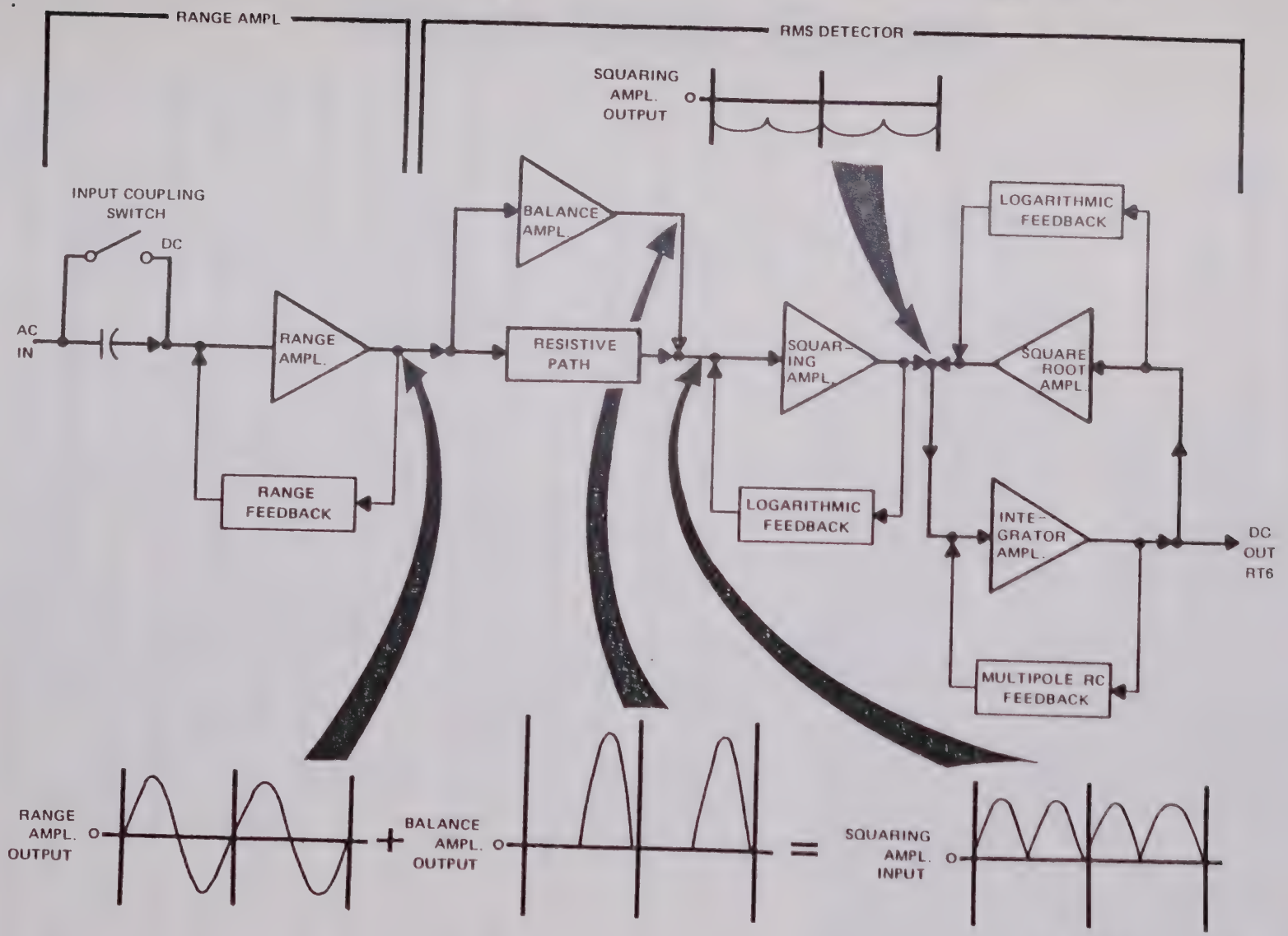

3.1.15/5.1.11.1 DPW/83

RMS converter: block diagram

1. input voltages are ranged to about 1V.
2. AC is rectified to an absolute value by combining the range and balance amp outputs.
3. rectified voltage is squared, integrated and filtered, then the square root is extracted.
4. the output to RT6 is a DC voltage from 0 to 20 volts.

Schematic, page 609A-16

5. due to the log response of the pn junctions the signal is squared by Q8A and Q12A, the output voltage is the square root of the integral of the square
6. the conversion is made by using the rectified ac signal to pump current through Q8A and Q12A, then with a dc voltage Q8B and Q12B are pumped with a matching current until both currents match

IEEE Interface Hardware Signals

- 8 bit data: DI01-DI08
- 3 Handshake lines:
  data available - DAV
  data accepted - DAC (NDAC)
  ready for data - RFD (NRFD)
- 5 Control lines:
  attention - ATN
  interface clear - IFC
  service request - SRQ
  remote enable - REN
  end or identify - EOI
- All lines are negative logic: 1 = false, 0 = true

IEEE: interface signals

1. eight bit interbus data transferred on DIO1 through DIO8.
2. DAV, DAC, and NRFD provide data transfer handshake control.
3. 5 control lines ATN, IFC, SRQ, REN, and EOI.
4. interbus data uses negative logic, 0=True, 1=False.

IEEE Block Diagram

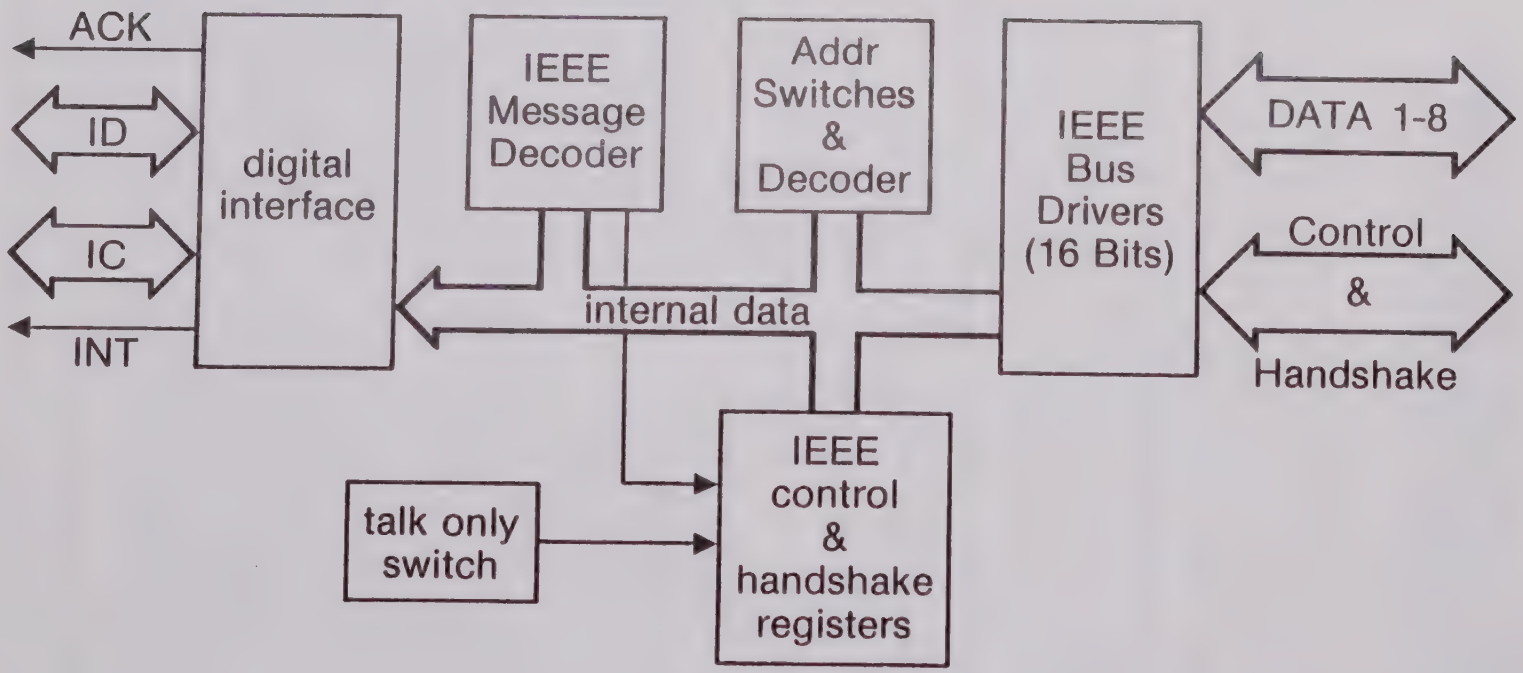

3.1.16/5.1.15.1 DPW/83

IEEE (-05): Block Diagram

1. digital interface provides ACK decoding by using all the IC lines and buffers and gates data to and from the ID bus.
2. ACKnowledged functions include: response reg, control reg, software reset, status reg, and data reg.
3. IEEE message decoder responds to messages sent from the IEEE controller such as SPE, serial poll enable.
4. the module's IEEE address is set by the Addr Switches.
5. the control and handshake registers determine the talk, listen, addressed, and unaddressed state of the module.
6. IEEE bus buffers drive DIO1 through DIO8, handshake lines DAV, DAC, NRFD, and control lines IFC, ATN, EOI, REN, and SRQ.

Bit Serial Interface Block Diagram

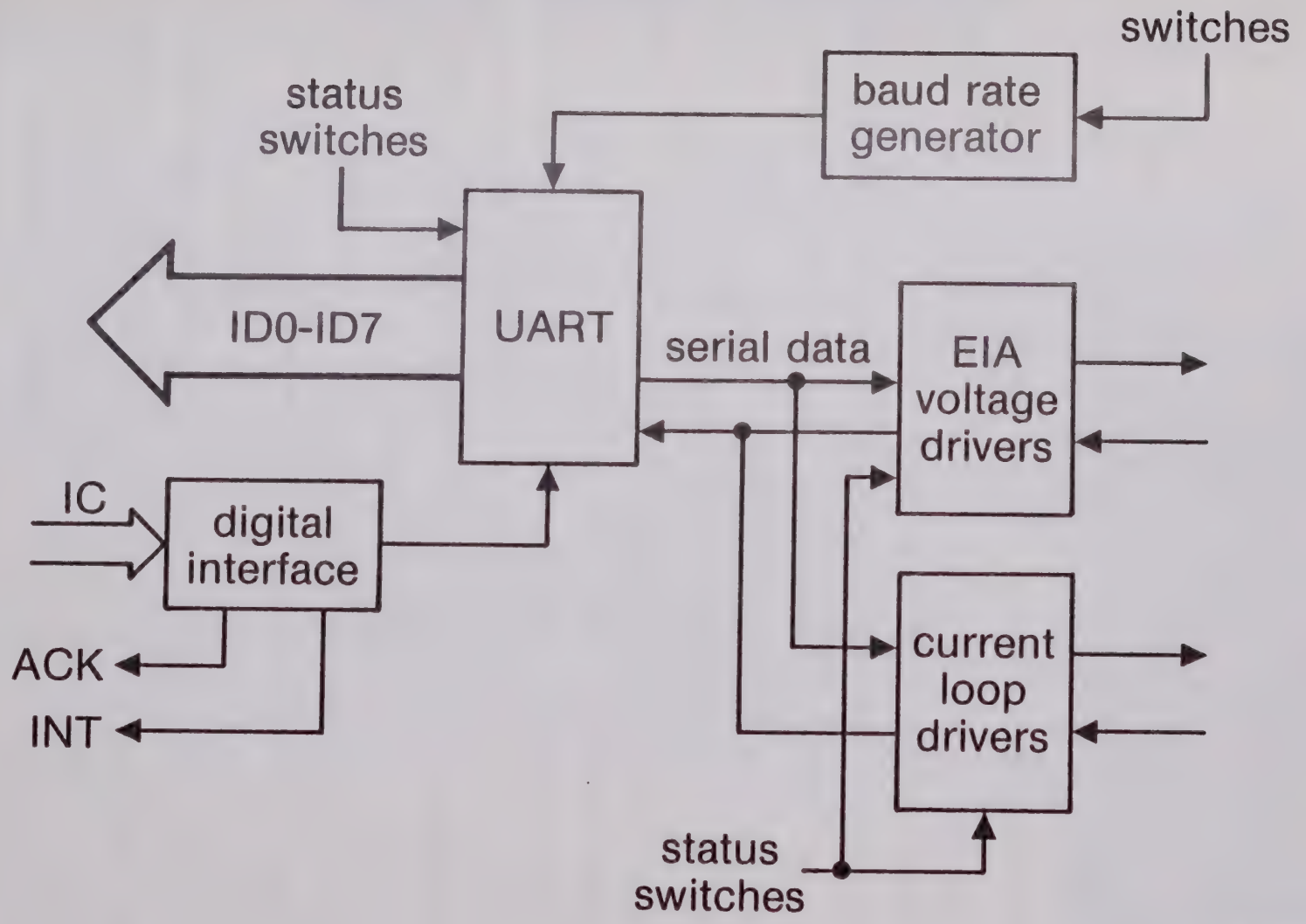

3.1.18 DPW/83

Bit serial: block

1. UART interfaces directly to ID data bus.
2. the digital interface controls read/write operations to the UART, returns ACK, and controls the interrupts logic.
3. baud rates from 50 to 9600 are set by switch inputs to the baud rate generator.
4. there are additional status switches that control parity, number of stop bits, current or voltage serial outputs, and select between RS232 B or C.

Summary and Conclusions

1. general theories are in the manuals.
2. detailed theories for each module are in the student workbook.
3. digital signal flow is described in the manual's theory of operation.
4. analog signal flow is also in the manual's theory section.
5. one on one test for Unit 3.3 covers digital and analog signal flow.
6. component level one on one tests cover detailed theory based on the workbook material.

Circuit Name	Paragraph
Introduction	3.1
DC Signal Conditioner Module	3.2
Active Filter Module	3.3
A/D Recirculating Remainder Module	3.4
Front Panel Display	3.5
Controller Module	3.6
Isolator (-08A) Module	3.7
TTRMS AC/DC Converter Module	3.8
-01 Averaging AC/DC Converter	3.9
-02/-02A Ohms Converter	3.10
-03 Current Shunt	3.11
-04 Calibration Memory	3.12
-05 IEEE Remote Interface	3.13
-06 Bit Serial Remote Interface	3.14
-09A RMS AC Converter	3.16
Appendix	3.17

The Detailed Theories.

This section of the student workbook describes the electronic circuits of the 8500 series. A block level understanding of the instrument is assumed before you start analysing any circuit in detail. Block level theories can be found in the manuals, in unit 3.3 of the workbook, and the blue 8500 student handout. You should be familiar with the theories in both of these documents and have them handy when you're studying a module.

Each module is divided into small electronic blocks, discussed one at a time. Every new topic, or paragraph has a graphic to its immediate right. While you're reading the text, follow the signal flows and theories by examining the graphics. When you finish a paragraph, find the circuitry being discussed in the manual's schematics. This helps tie the 'small blocks' together.

You can start with any module listed in the table of contents. When you feel confident that you understand how a module works, contact the instructor for your one on one test. He'll go through the module with you to make sure you understand each block. As always, if you have questions contact the instructor.

3.2.1
Relays K1 and K2 switch input voltages and attenuation on the signal conditioner. If both relays are energized, the input is from the Volt/Ohm input sense terminals and the attenuation is 64. If just K1 is energized, the input is not attenuated. If just K2 is energized, the input is from RT1, (ohms or current shunt). Q10, Q11, CR3, and CR4 provide overvoltage protection.

Input Attenuators and Relays

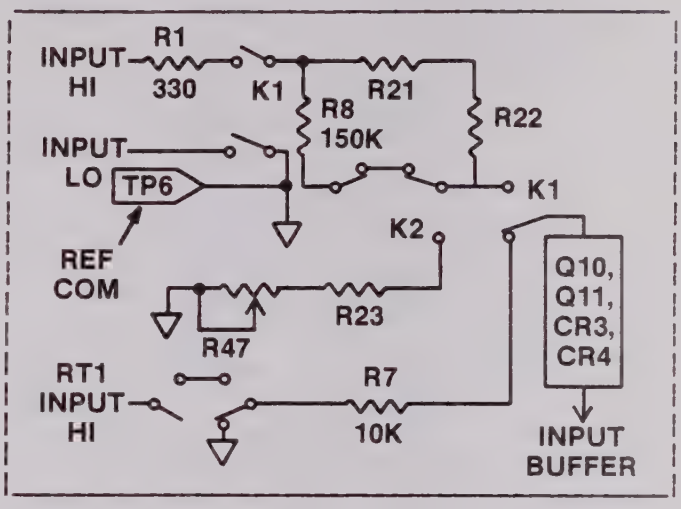

3.2.2
When K1 is energized and K2 is off the buffer's input circuit includes R1, R8 in parallel with R21 and R22, and the overvoltage clamping circuitry. CR3 and CR4 are 22 volt zeners that protect the conditioner's buffer amplifier. Q10 and Q11 provide a high impedance to avoid loading the input HI signal. Fill in the voltage values at the collectors or Q10/Q11 with two input levels of 10 volts, and 1000 volts.

Vout= 10V: V1= _____

Vout= 1KV: V1= _____

Attenuators and protection

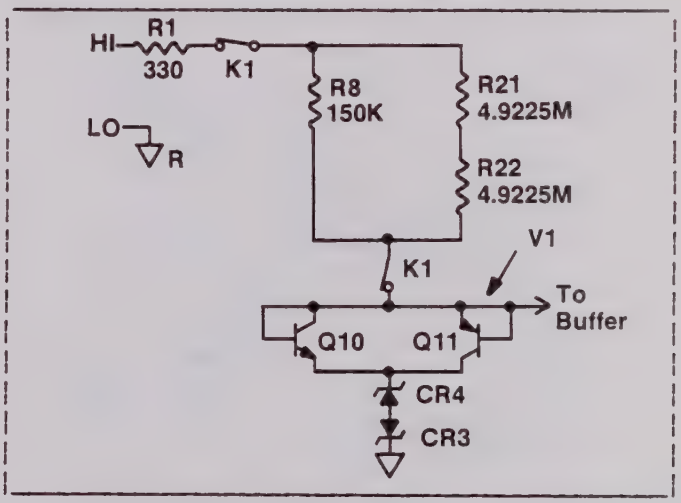

3.2.3
When K1 and K2 are both energized the impedance at the HI input is brought to about 10Meg ohms, (R1 + R21 + R22 + R23 + R47's adjusted value). The 'R21/R22/R23' resistor set is selected to produce a zero temperature drift.

Attenuators

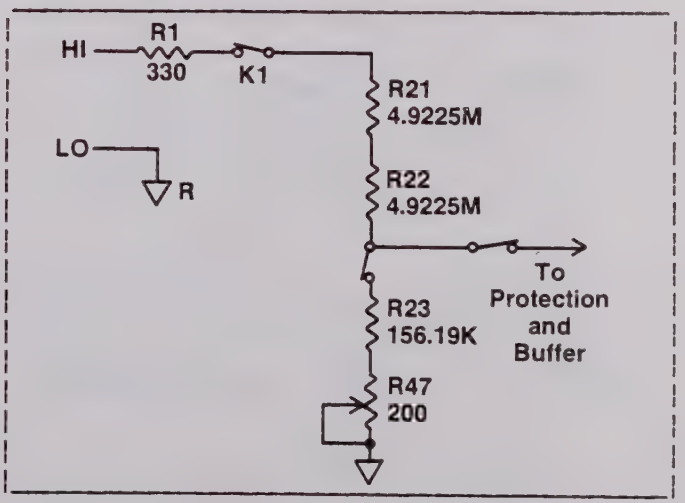

3.2.4
The main amplifier section uses a super-beta dual transistor, Q18 in combination with a common base dual transistor, Q19 to drive operational amplifier, U5. The amp is biased using a 'double bootstrap' technique that follows the input voltage. The entire input section floats between a 1mA current source, (Q37, R71, and R72) and a 1.4mA current sink, (Q38, R97, and R98).

Main Amp: Constant current biasing

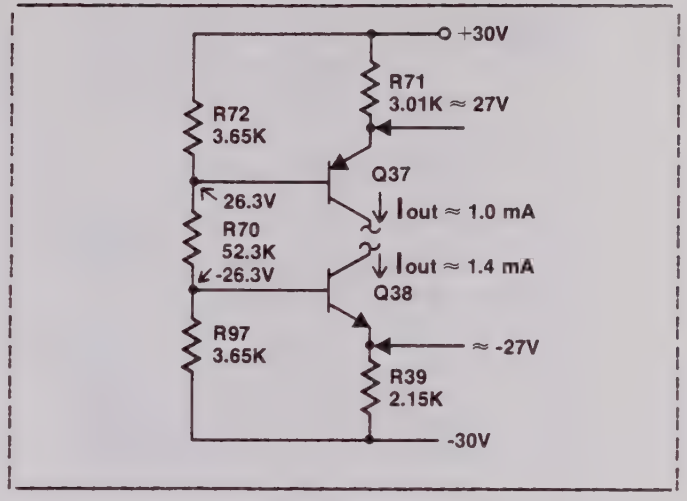

3.2.5
The input voltage is tracked and buffered by U4 to bias the diff amp. Most of Q37's 1mA flows through R76, fixing TP6 at 4v above the input. This 1mA current is sunk by Q38 with the remainder of Q38's current flowing through R64, fixing its low end at 400mV below the input voltage. The 1.4mA flowing through R63 holds the collector of Q38 at 3 volts below the input. Q23's thermal characteristics provide a first order TC match for the diff-amp's input stage. CR5 & CR6 were added to prevent latch-up of U4, (8505, 8506, and some modified 8502s).

Bootstrap Biasing the input amp

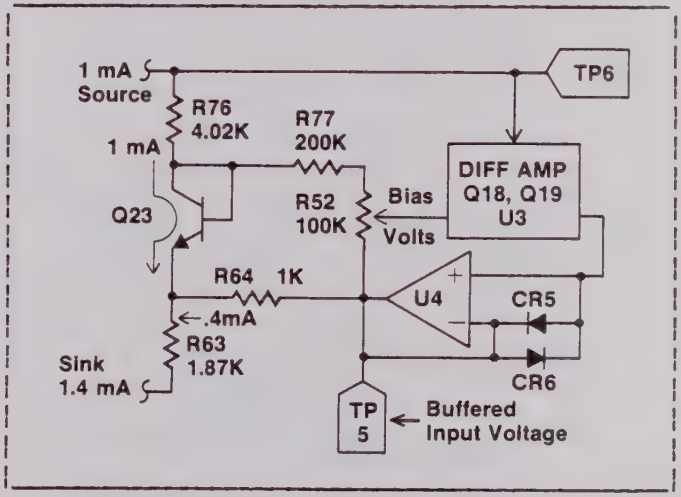

3.2.6
Transistor pair Q18 is biased a few tens of millivolts above the input through R36, and 3V below the input by R35. The left transistor of Q18 is the non-inverting side. The right transistor is the inverting side and therefore the negative feedback node. Clamp transistors Q12 and Q13 prevent damage to Q18 by preventing the base-emitter junctions of the super-beta from back biasing. The beta is severly degraded if the base-emitter is allowed to reverse bias.

The Super-beta Input Amp

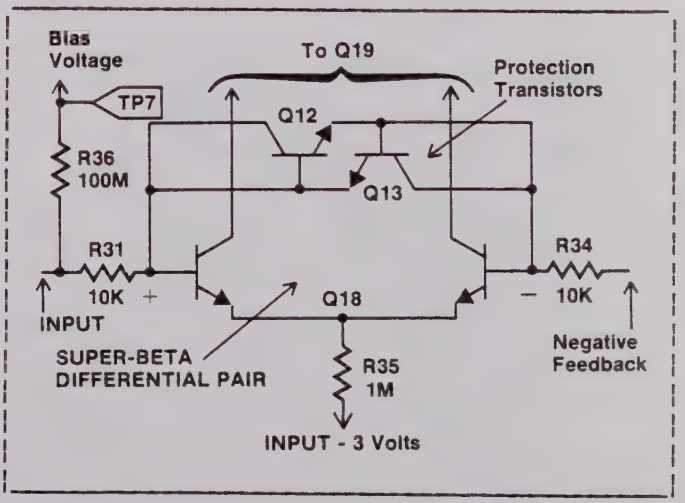

3.2.7
Q19 is the common base cascode stage of the input amplifier. Q18's collectors drive Q19 and its six, (three per transistor) collector resistors. R58 and R59 are two 2M ohm TC matched resistors; R56 and R57 are for offset correction; and R54 and R55 are for TC correction. Q19's common bases are biased the the voltage at the top of R61. The temperature characteristics of Q22 compensate for thermal drift in Q19. The output from the collectors of Q19 drive the final amplifier gain stage, U3.

Main Amp: Cascode and Gain

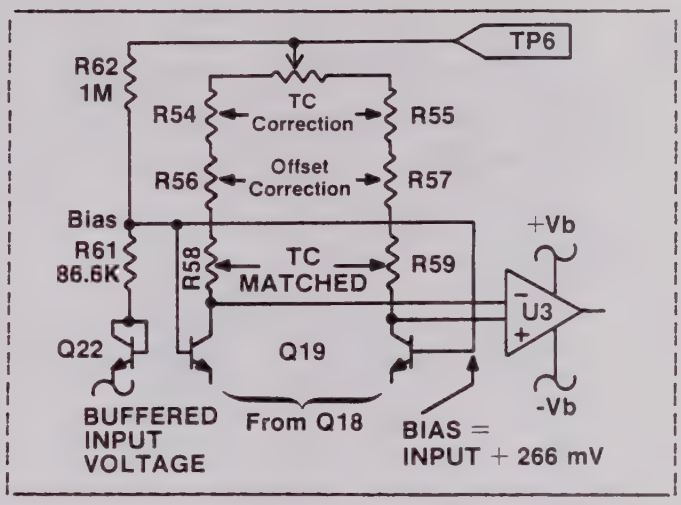

3.2.8
Bootstrap voltages +Vb and -Vb are controlled by U6 and U5. These voltage followers float a constant differential voltage that follows the output of U3. R99, R73, R74, and R75 hold +Vb and -Vb at a constant 32V difference. The 8505 and 8506 use 100k resistors for R99 and R75, therefore the difference between +Vb and -Vb is 30V. (This change was also made to some existing 8502s).

More Bootstrap Biasing

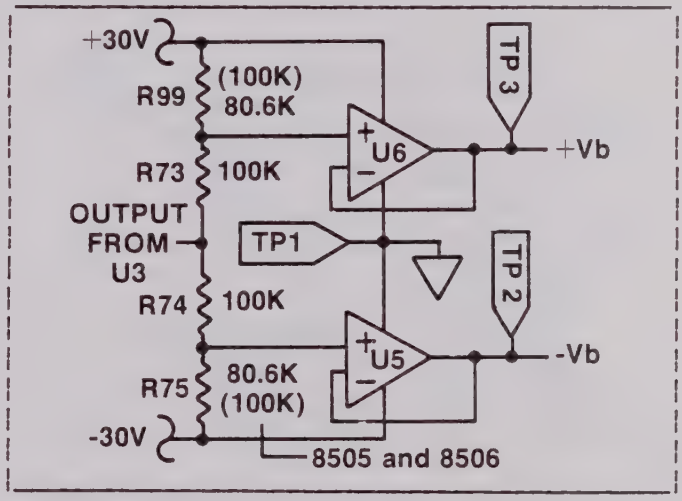

3.2.9
Gain for the amp is set by one of three feedback paths switched by FETs to the amp's inverting input. When the X1 gain network is selected Q36 is off turning Q16 on. This provides a direct feedback path to the amp's inverting input through R32 (in series with R34). R32's 10K resistance is matched by the other two feedback paths to maintain a constant impedance for all three gains.

Unity Gain Feedback path

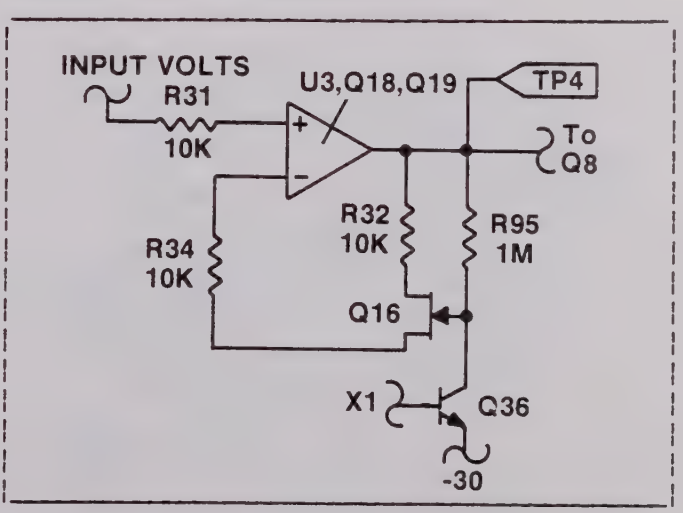

3.2.10
The two remaining gains are different for the 8500/8502 and 8505/8506 meters so lets take one at a time. Gain stages for the 8500/8502, (X8 and X64) are set by voltage divider network R26, R48, R51, R24, R49, R50, and R25. To enable the X8 gain, Q34 is off turning Q15 on, closing the feedback path from R48. The voltage at this point is 12.5% of U3's output voltage, setting the gain of the amplifier to X8. Q15's 'on' voltage is driven by U4 and follows the feedback voltage to insure that the FET is fully turned on.

8500/8502 Gain of Eight

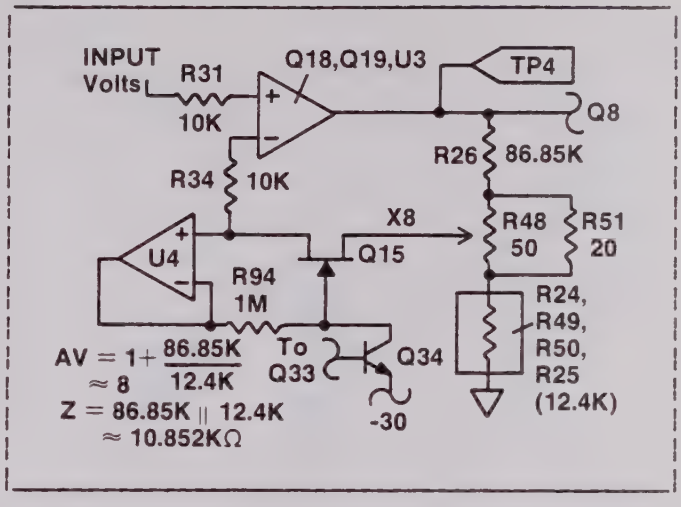

3.2.11
The 8505/8506 gain of ten circuitry is the same except for feedback resistors R24 and R25. The X10 gain is enabled by Q15. The feedback path has an impedance of 8.688K ohms. As with the 8500/8502, R48 adjusts the gain.

8505/8506 Gain of Ten

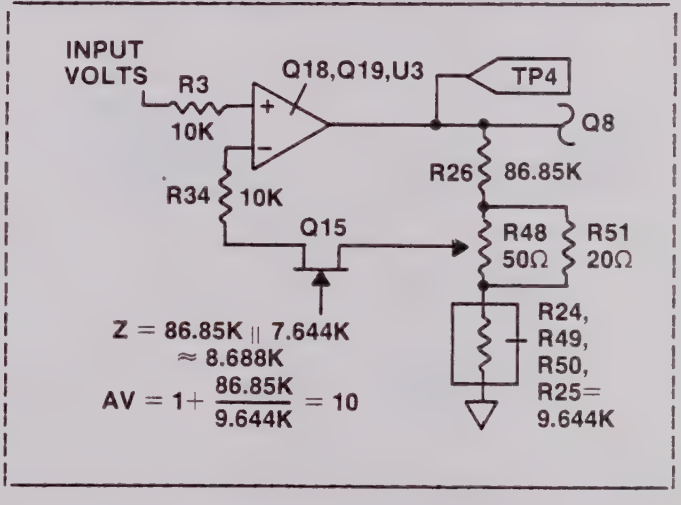

3.2.12
The third gain stage for the 8500/8502 is set to x64 and trimmed by R49. When Q32 is off Q14 turns on, and the path through R33 is enabled. U4 buffers the 'on' voltage that enables Q14. As with the case of R32, (x1 feedback path) R33 is an impedance matching resistor.

8500/8502 Gain of 64

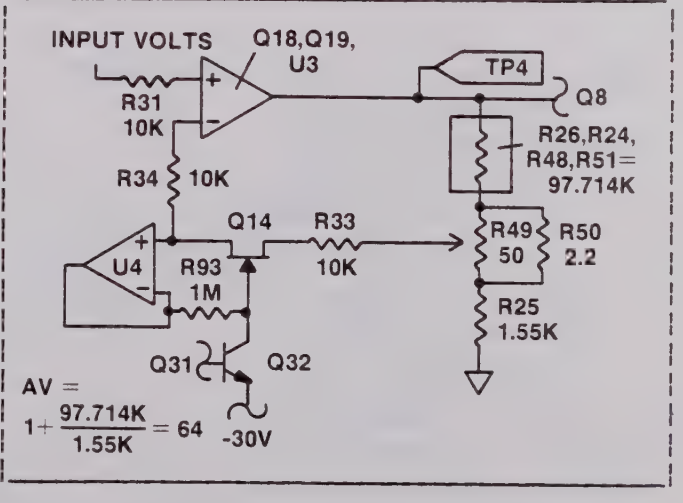

3.2.13
The 8505/8506's third gain stage is set to X100 by turning Q14 on. R49 trims the gain.

8505/8506 Gain of 100

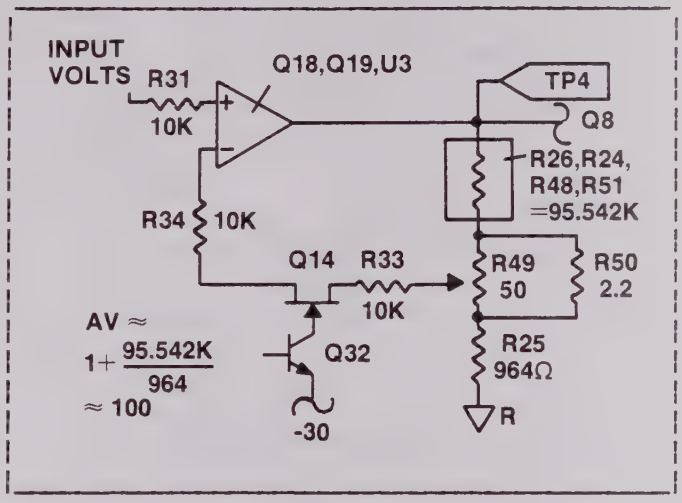

3.2.14
The final link in the analog route is Q8. This FET enables the conditioned input signal onto the analog bus on the RT6 line. When Q7 is turned off, Q8 turns on through R15 to the level of the output voltage from U3. RT6 is also used by the AC/DC converters.

Output voltage multiplexing to RT6

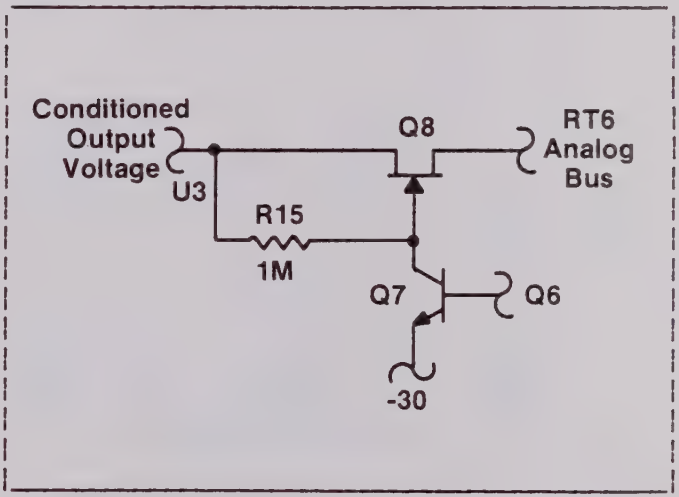

3.2.15
Relays K1 and K2 are held on by setting the coil voltage to 3V. They're biased off by holding the coil voltage to 1.7V. This scheme gives lower thermal changes than the wider rated relay voltages of four to zero volts. R3 and C1 couple the digital voltage from U1 to complementary transistor pair Q3 and Q4. RC coupling of the digital signal causes a spike voltage to ensure that the relays latch on and off. R4 and R5 set the bias voltage for Q4. CR2 is a kick-back protection diode that shunts the stored charge held in the relay's coil.

Relay drive circuitry

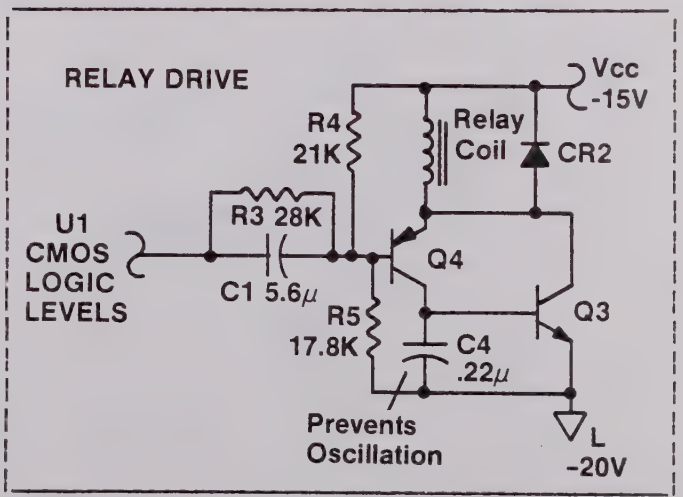

3.2.16
This waveform shows voltages across the relay coils of K1/K2. The signal from U1 is RC coupled to produce positive and negative spikes from the output of Q1. The spikes are designed to exceed the minimum pullin and drop out voltages that turn the relays on and off.

Pull-in and drop-out waveforms

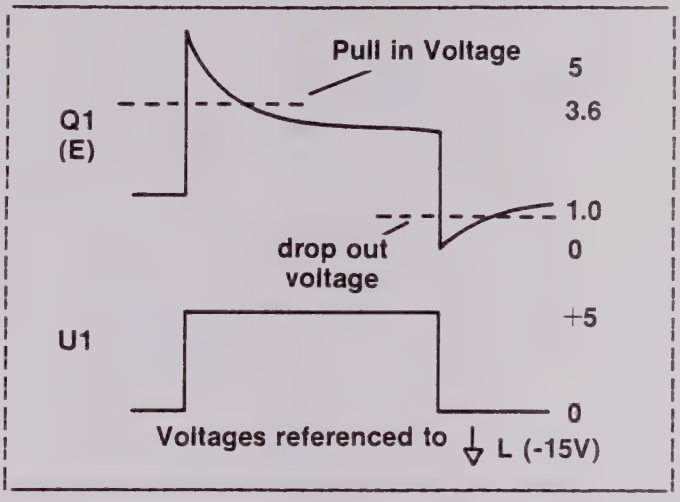

3.2.17
The controller module addresses the signal conditioner by setting its interface control lines, IC0, IC3, and IC4 high. The controller then expects an ACK signal to be asserted by the conditioner. U2 decodes this address and drives Q5 on which provides the proper acknowledge signal back to the controller. When the controller retracts the signal conditioner's address, the output from U2 goes high clocking interface data bits ID0 - ID3 into U1. These latched ID lines control relays and FETs on the conditioner card.

Digital section: Address and ACK

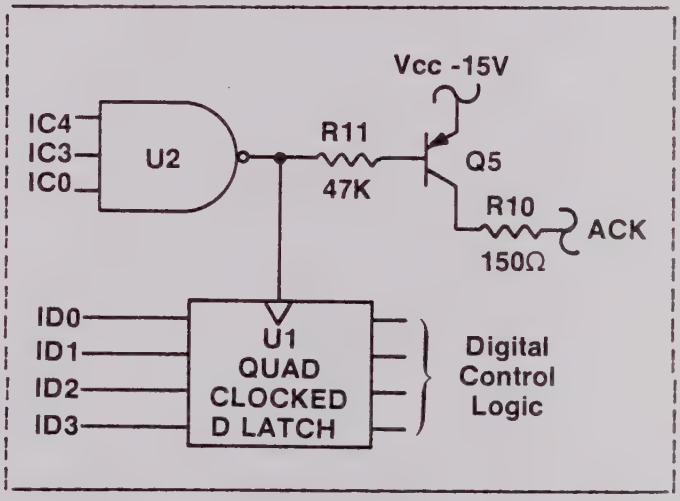

3.2.19
There are two ways that the conditioner module shifts digital signals from a five volt CMOS logic level to a 30 volt FET level. One example is from U2, pin 10 to the gate of Q8, the analog output FET. The CMOS level at pin 10 of U2 is fed to the base of Q6, configured in a common emitter inverting switch. When pin 10 is low, both Q6 and Q7 saturate and the gate voltage of Q8 is held at -30volts to turn it off. When pin 10 is high, Q6 and Q7 are off and the gate of Q8 is pulled up to its own source voltage by R15, turning the FET completely on.

Logic level switching

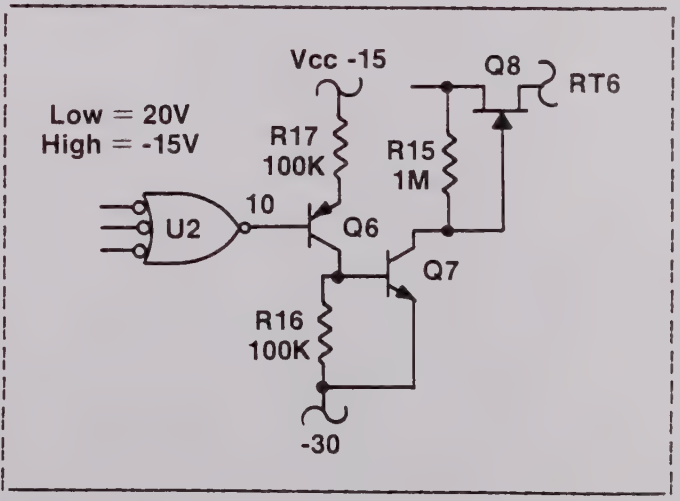

3.2.20
The second example of logic level shifting is from U2, pin 9 to the gate of Q16 through. When the level at pin 9 is low Q35, configured as a common base non-inverting switch, is turned off. This turns Q36 off and the gate of Q16 pulls up to the voltage at R32 by R95, turning the FET completely on. When pin 9 is high, both Q35 and Q36 are saturated and the gate of Q16 is held at -30 volts, turning the FET off.

Logic level switching

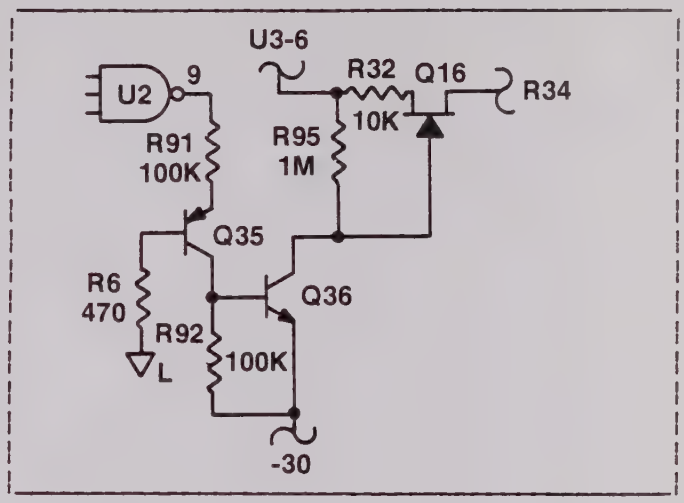

3.3.1
The active filter module is responsible for low pass filtering, buffering, and multiplexing the external reference and the RT6 input line. It provides fast, (74.7Hz) and slow, (7.47Hz) low pass filtering of the input signal as commanded by the controller. The buffering provides low output impedance to the A/D converter. To study the active filter we'll break the circuitry into four sections: multiplexing network, filters, follower amplifier, and digital interface.

The Active Filter Module

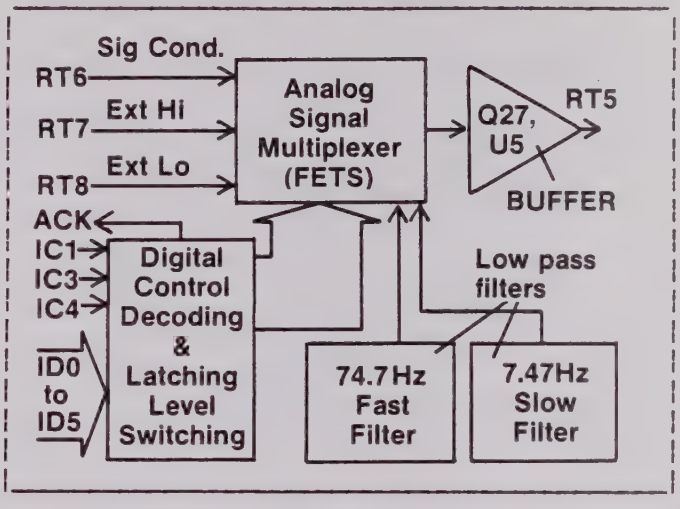

3.3.2
The multiplexing network switches three analog signals: the RT6 analog bus line; the external reference HI, RT7; and the external reference LO, RT8. From there the signal is either routed through Filter Y, Filter Z, or applied directly to the follower amp by bypassing the filters. Q31, Q33, and R1 protect the RT6 input, while Q14 through Q17 protect the external reference lines. R4/R5 and CR1/CR2 provide 22 volt positive and negative biasing for the protection FETs.

Multiplexing and Input Protection

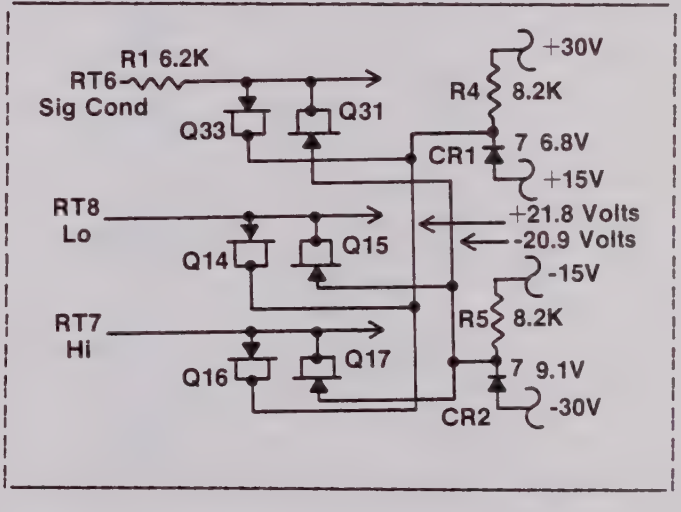

3.3.3
RT6 inputs are routed to the filters and output buffer when Q18 is enabled. With ID3 latched high, Q5 and Q6 are turned off allowing the gate of Q18 to be pulled up to the level of the buffered output voltage. To turn Q18 off, U1 pin 5 is commanded low. This saturates Q5 and Q6, pulling the gate of Q18 down to -30 volts. This FET switching scheme is also used to enable RT7 (HI) or RT8 (LO) by turning Q20 or Q19 on.

Active filter output

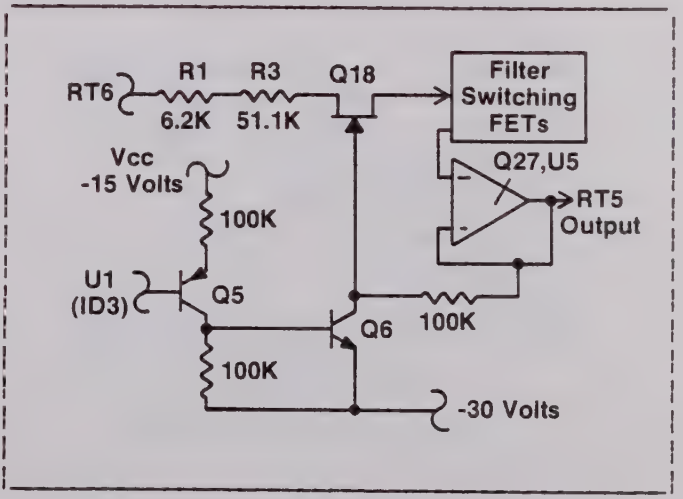

3.3.4
FILTER Y and FILTER Z are low pass Bessel filters with different bandwidths and settling times. These AC coupled active filters minimize settling time without introducing DC errors. Filter Y has its break frequency set to 74.7Hz. Filter Z is set to 7.47Hz. The filters are enabled one at a time, or bypassed altogether, when the 'no filter' configuration is commanded. FETs Q21 and Q22 enable Filter Y, Q23 and Q24 select Filter Z, and Q25 and Q32 bypass the filters.

Bessel Low Pass Filters

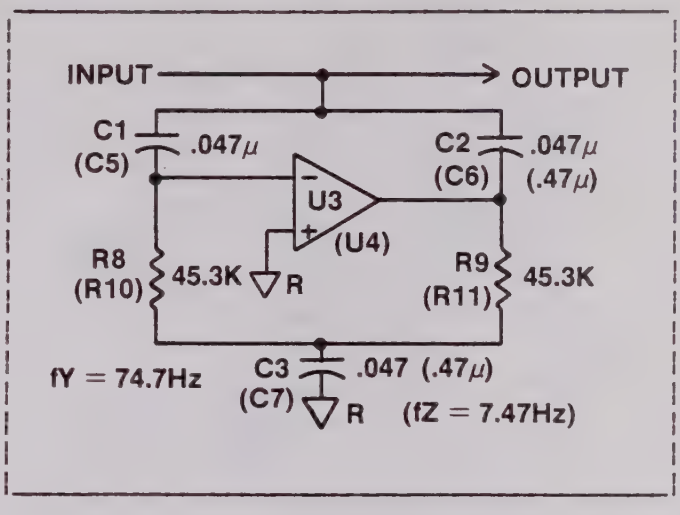

3.3.5
Dual current sources and a bootstrapped input stage bias the buffer amp. Q26 and Q30 provide constant currents of 410uA and 8uA that allow the voltage biasing for Q27 and U5 to float to a bootstrapped level. R12, R20, and R22 set the base voltages for Q26 and Q30. The constant currents are regulated by keeping the voltage drops across R13 and R23 steady.

Biasing network for the Buffer amp

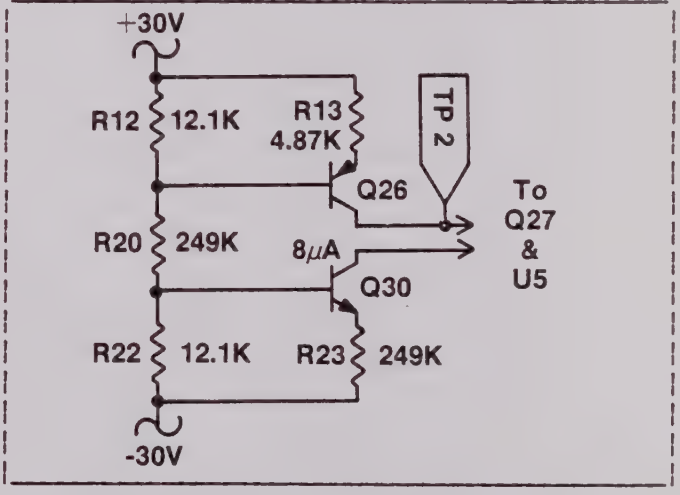

3.3.6
Dual super-beta Q27 and high voltage op-amp U5 form the buffer amplifier for the filter module. The 410uA current source in combination with R19 bootstrap the top of the input stage to 4.87 volts above the input voltage. R15 and R16 are TC matched to compensate for thermal drift in Q27. R21 matches the feedback impedance at the inverting node to the DC input impedance at the non-inverting node. Q28 and Q29 protect super-beta Q27 from back biasing its base-emitter junction. Reverse biasing Q27 would severely degrade its beta.

Buffer amp's input stage

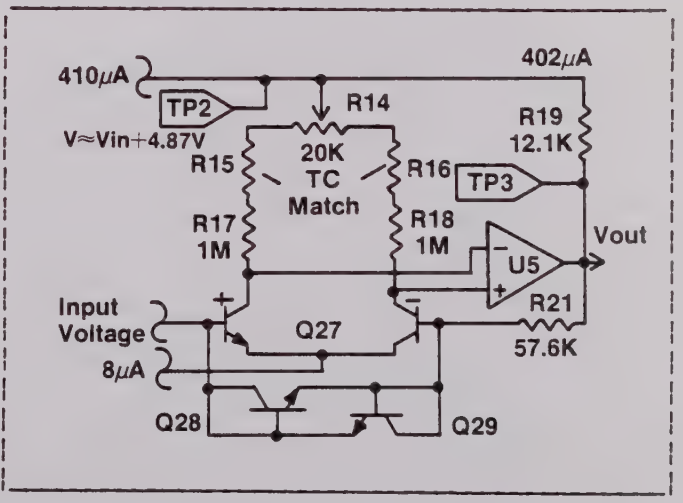

3.3.7
The controller addresses the active filter module by setting IC1, IC3, and IC4 high. Nand gate U2 decodes this condition and sends ACK back to the controller module via Q13 and R2. When the controller receives the ACK signal it retracts the filter's address. U2's output now goes high, clocking ID0 through ID5 into U1. The latched ID lines control FET switches through Q1 - Q12. Q1 and Q2 represent how all CMOS outputs from U1 are level shifted to -30V.

Digital Section: Address and ACK

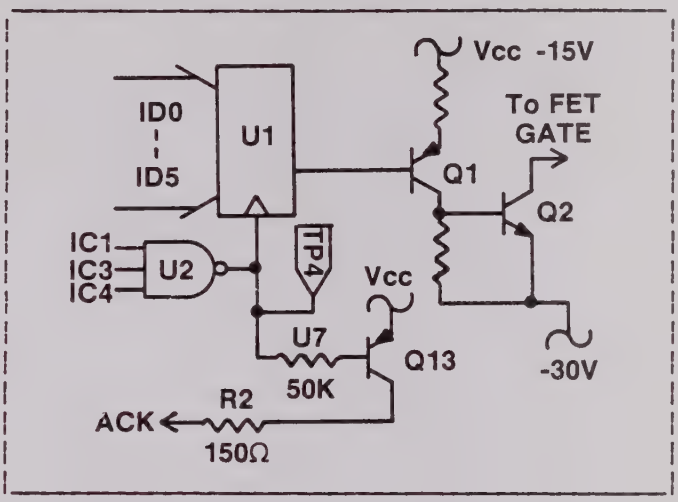

3.4.1
The fast R-squared A/D can best be described by examining its three major components: the analog section, the digital section, and the software driver. Each of these components will be discussed in detail beginning with the analog section.

Recirculating Remainder A/D

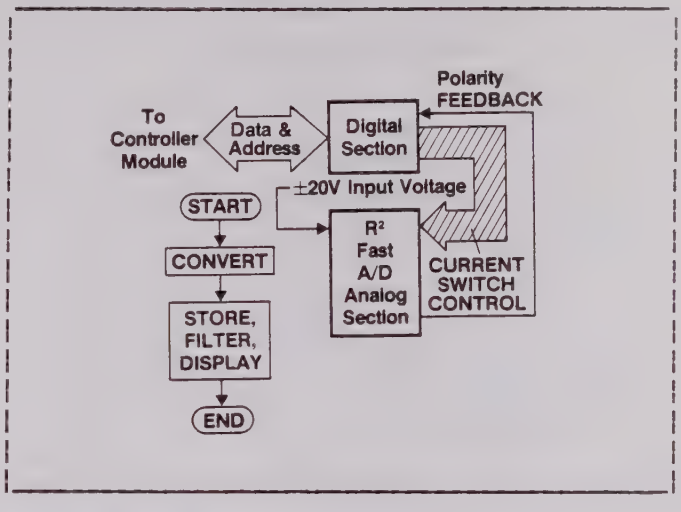

3.4.2
All analog voltage inputs are translated into currents and applied to the summing node of the remainder amplifier, Q27 and U7. The amp then uses feedback, either linearly through the 400.112K feedback resistor, or non-linearly through diodes CR5 and CR6 to ensure that the net current at the summing node is zero. The precise value of 'zero volts' is stored across C13 during the auto zero A/D cycle. R66 and C2 form a low pass filter for smoothing out VA2, (-VF). Q27 is biased through R41 with -VF.

Remainder Amplifier

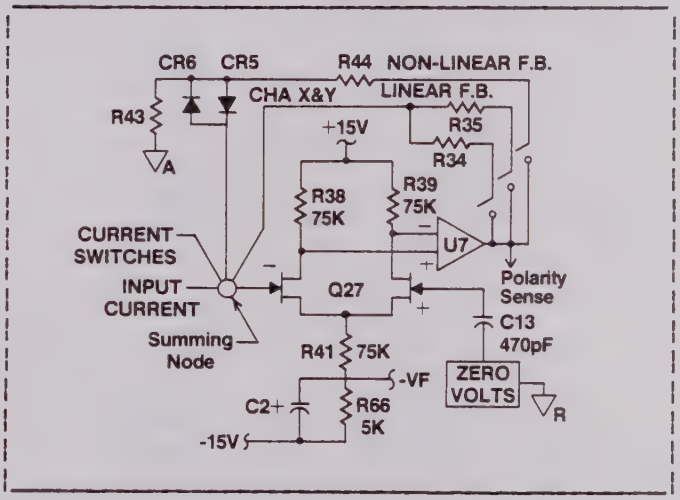

3.4.3
The remainder amp has a total of eight inputs into its summing node. Five binary weighted precision currents used for the d/a process, two remainder channels, X and Y, and the +/-20 volt input from RT5. The RT5 voltage is converted to a +/-560uA current before being presented to the summing node.

Summing Node Inputs

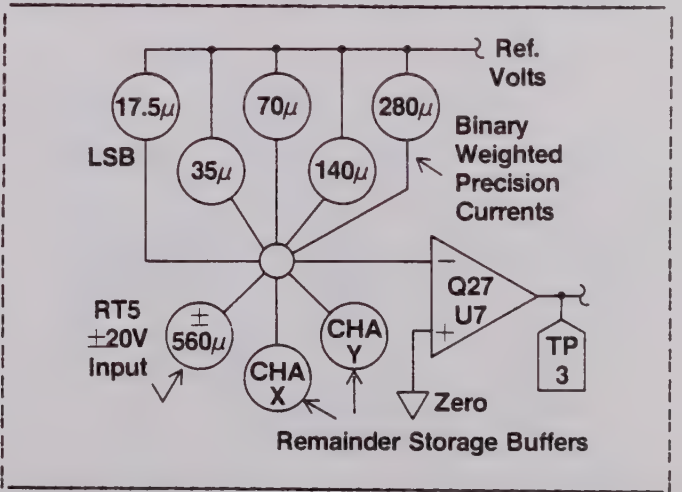

3.4.4
A stable -7V reference is switched to precision resistors through FETs to create the d/a current sources. The smallest current switched to the summing node, (LSB) is shown as an example and represents how the currents are created. R61 matches the load to precision voltage source, keeping it close to 50K ohms.

Precision Current Sources

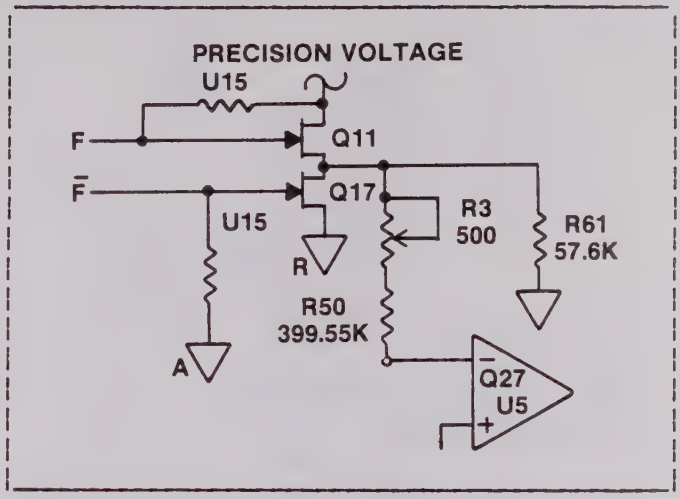

3.4.5
To be able to subtract both negative and positive currents from the input, the currents switched to the summing node must be bipolar. This is done by using the inverted and noninverted phases of the -7v reference. The example to the right shows how the LSB current, 17.5mA is created for both positive and negative polarities.

Switching Reference Voltage

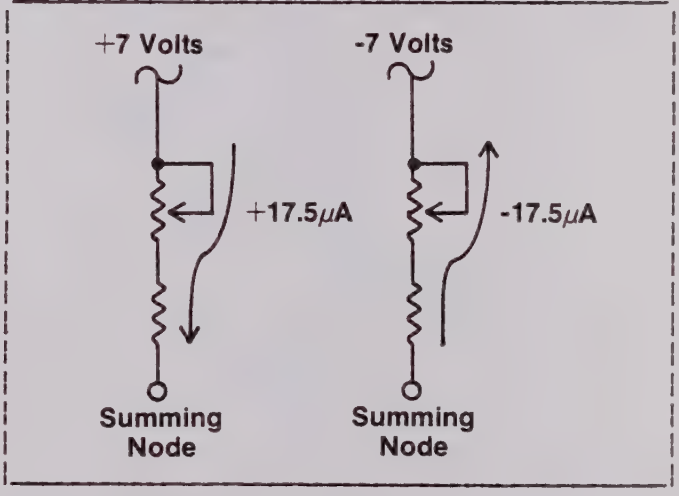

3.4.6
The -7volt supply is used as a reference for the current sources and the complete instrument, (RT4). Voltage reference U1 combines a precision, temperature compensated zener reference with a low drift transistor amplifier. The ref-amp is the input amplifier of a feedback network including amplifier U2 and feedback resistors R9 through R14. This arrangement generates a highly stable -7V at TP7. Inverting amplifier U3 provides a stable collector and zener supply voltage of +7V for the ref-amp.

-7 Volt Reference Voltage

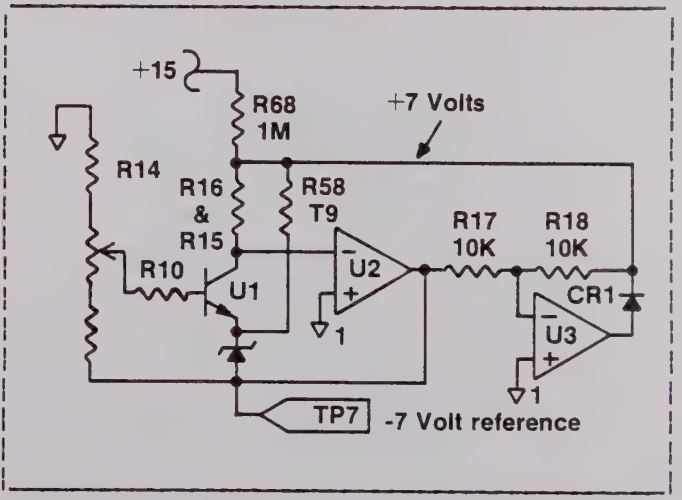

3.4.7
The switching reference circuit generates the appropriate reference signal from the precision -7 volt reference as commanded by the controller card. FET switches configure the reference buffer as an inverter for positive voltage reference and as a non-inverter for negative reference.

Reference Buffer

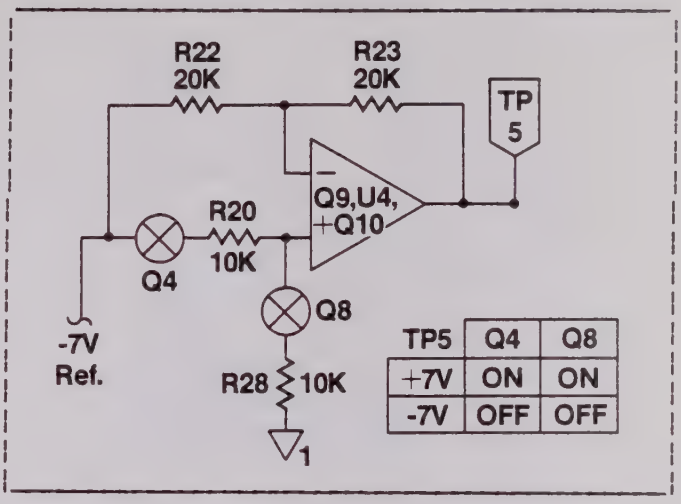

3.4.8
When positive reference voltage is required, the circuit is oriented as a unity gain inverter by switching Q6 and Q8 on. R22 and R23 configure the input and feedback resistors while R28 matches the input impedance. C5 is charged to an 'offset compensated' zero volts during the auto zero period. This voltage biases the inverting node of the op-amp.

Positive Reference

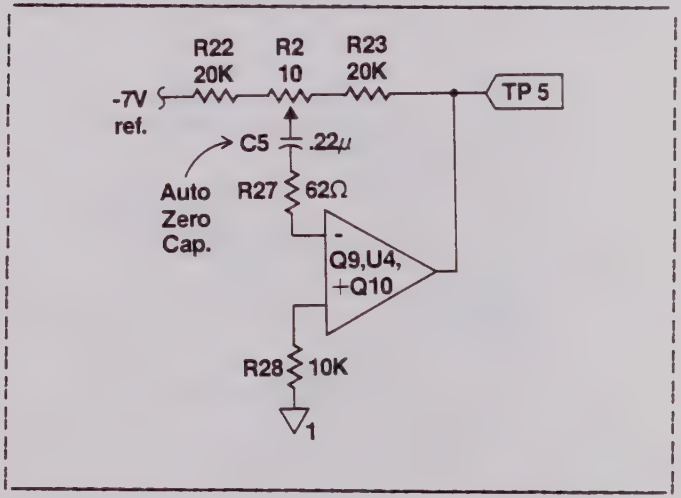

3.4.9
When a negative reference voltage is needed, the circuit is configured as a unity gain, non-inverting buffer amp. The -7 volt input is applied to the non-inverting input node through Q4. Feedback is through R23 and auto zero cap C5 as before.

Negative Reference

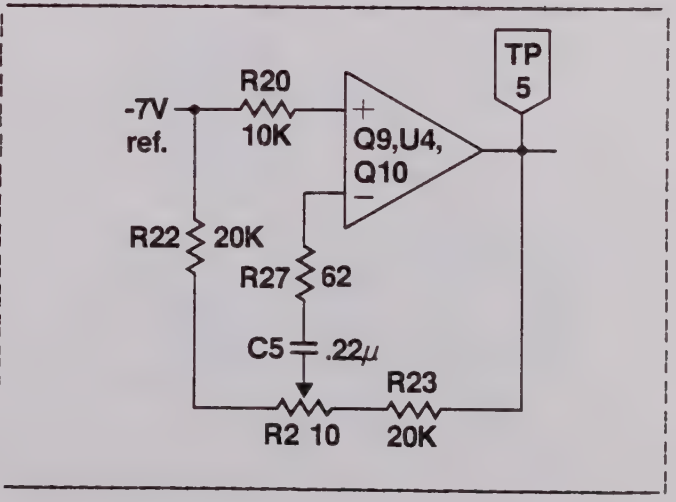

3.4.10
Low temperature drift is obtained in the switching reference by completing a local auto zero loop during period Z1 and Z2. In this mode, the amplifier output is switched directly to the inverting input node and to C5 via Q6. The other side of C5 is switched to the non-inverting input node via switch Q7, storing the amp's temperature induced offsets on C5. FET Q5 is on during auto zero to reduce settling time of the feedback loop. R27 is included to dampen oscillations.

Reference Voltage Auto Zero

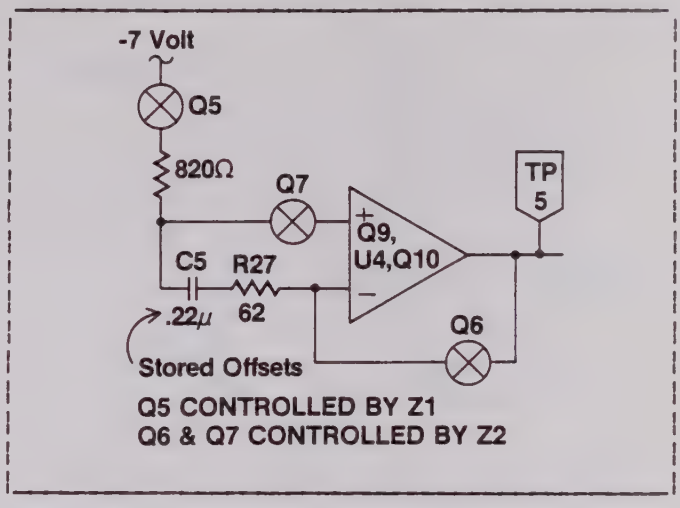

3.4.11
The switching reference amp is a combination of two major components. Q9 is a high input impedance, low offset dual FET, and U4 is a high gain monolithic op-amp. Q9 is biased with a 400mA constant current from Q10.

Switching Reference Amplifier

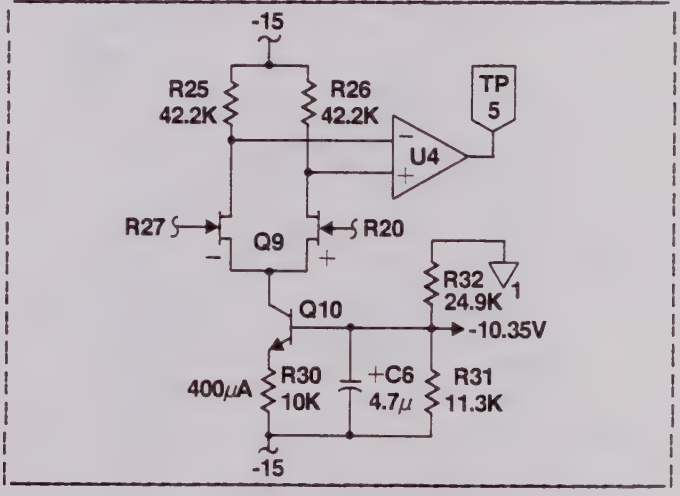

3.4.12
The A/D module receives its input from the active filter module as a voltage with a maximum span of +/-20V on RT5. This voltage is converted to a current of +/-560uA by R55, R67, and R56, and switched to the summing node of the remainder amp by Q2 and Q3. CR3 and CR4 hold the bottom of R56 close to ground maintaining a constant load on the RT5 line when Q2 and Q3 are turned off. CR3 and CR4 also protect the summing node by limiting the input voltage to 0.7V. Q1 provides temperature compensation.

Input Voltage to A/D

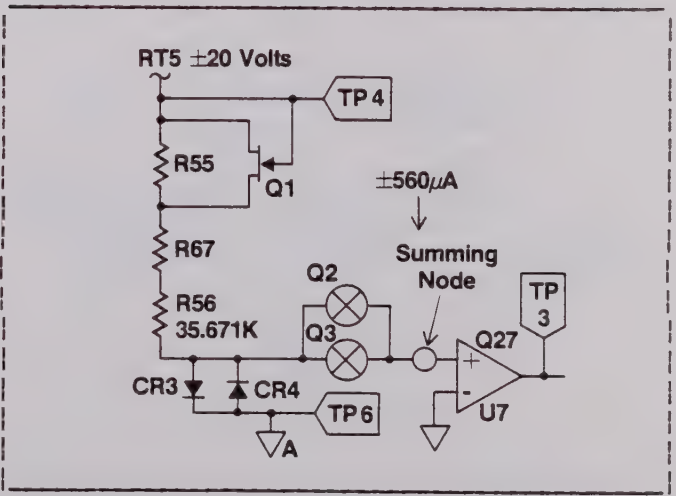

3.4.13
The A/D module contains two storage channels, X and Y. Channel X consists of Q32, C10 and R37, buffer U6, and output switches Q25 and Q26. During the first remainder period Q26 and Q32 are turned on enabling the X16 gain, (R35). The remainder voltage at the output of U7 is now stored on C10. Q25 then applies this signal to the summing junction during the decision period for channel X. The next remainder voltage is stored in channel Y, (C9) and, in turn, is applied to the summing junction through Q23 as an input for the next decision period.

Storage Channels X and Y

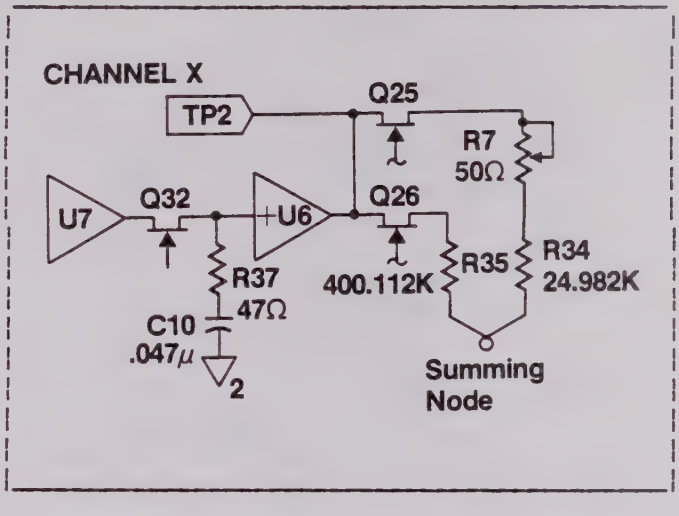

3.4.14
The first step in the A/D conversion is to detect the polarity of the input signal. This information is used during the decision period by the digital section and the controller's program. When the sum of the input currents are positive, U4 drives its output negative. This brings the sum of the total currents at the inverting node to zero, turning Q28 on through R48. When the output of U4 drives positive, (for negative input currents) Q28 is turned off. CR9 protects Q28's emitter-base junction from excessive reverse bias voltage.

Step 1: Detect Input Polarity

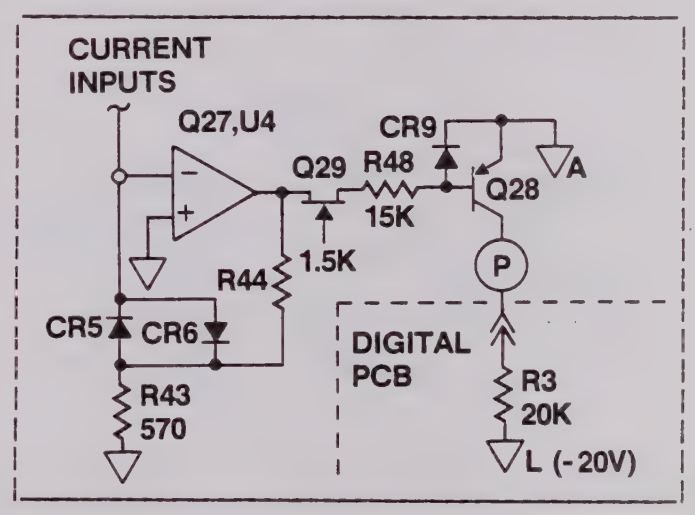

3.4.15
Input drift is reduced with an auto-zero loop consisting of amplifier U8, remainder amplifier U6, switch Q30 and storage cap C13. The accumulated offsets stored on C13 are used as a zero reference during decision and remainder periods.

Auto Zero Loop

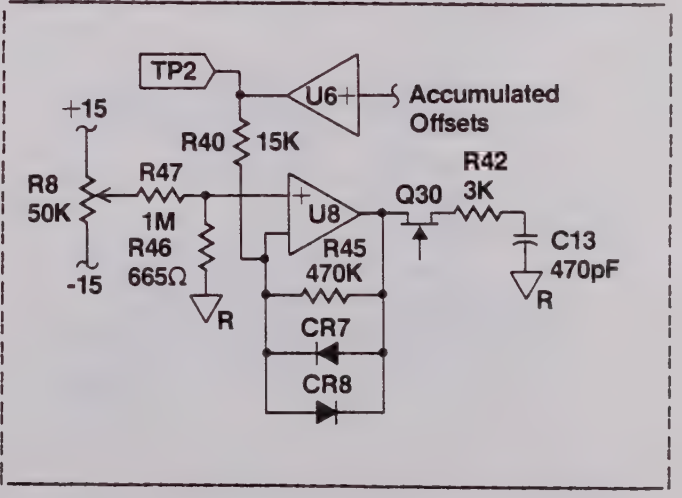

3.4.16
U33 decodes the addresses used for read and write operations from the controller to the digital section of the A/D. Interface data is enabled on the bus when IC2, IC3, and IC4 are high and the output of U33, pin 6 goes low. Data is latched into U35/U35 when the controller retracts the IC lines and pin 6 goes high. Polarity information on ID7 is read into the controller when IC1 and IC2 are high and the output from U7 pin 2 is high. Pin 2 is low only in Auto Zero or remainder periods, after any decision period, or master reset. All read or write operations are decoded by U25 and acknowledged when Q1 pulls the ACK line high.

Digital Section

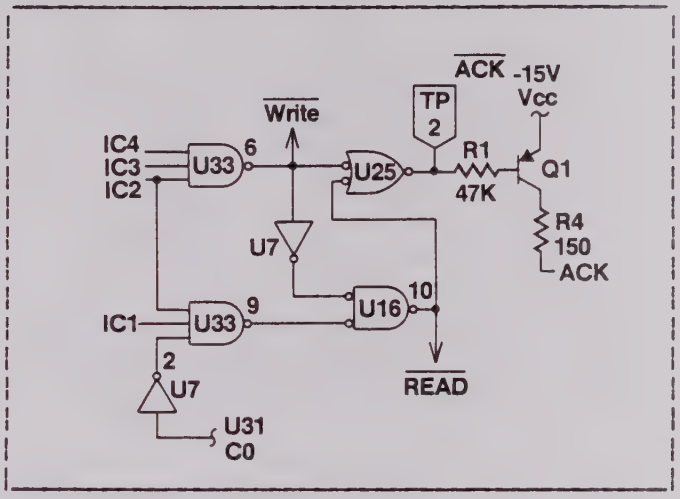

3.4.17
When pin 5 of U7 goes low, (read), polarity information, inverted by U7 is latched into U6 and the CMOS transistor combination U5 is enabled. Polarity data is now enabled onto ID7 and read by the controller. The function of U5 is this: when read is low, QA and QD are turned on. The on/off state of QB and QC is determined by the output of U6, and if QB is on, ID7 is pulled up to Vcc. If QC is on, ID7 is pulled to logic common. When read is high, both QA and QB are turned off putting U5 in its high impedance state.

Reading Polarity Data: ID7

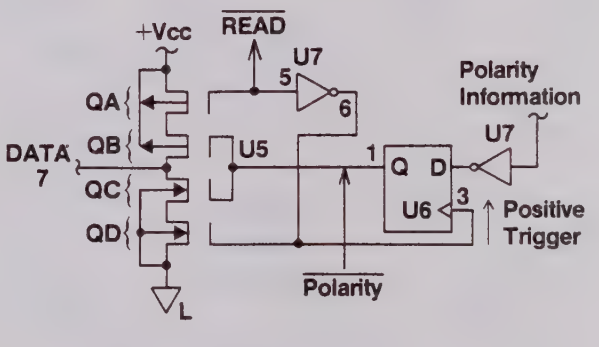

3.4.18
U34 and U35 latch interface data written from the controller. When pin 6, U33, (write) strobes high, the data present on ID0 - ID3 is latched into U34/U35. ID0 initializes the A/D's digital section by forcing a master reset. ID1 sets the Auto Zero state. ID2 selects the input to the analog section from the RT5 bus or remainder amps, and ID3 determines the remainder storage channel. Remainder periods 2 & 4 use Channel Y, while periods 1 & 3, and the auto zero loop use Channel X.

Latching Interface Data

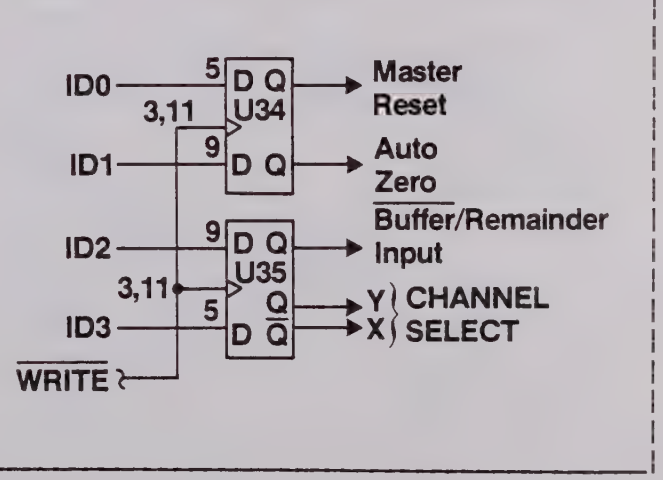

3.4.19
U31 is a CMOS 4022, divide by eight counter with decoded outputs used as a state machine for controlling the current switch registers. When the reset pin goes high U31 is initialized to the C0 state. The rising edge of ACK clocks U31 through its seven active states, C0 through C7. The seventh clock input resets U31 to the C0 state by U34. U25, pin 11 then goes high reseting U34. This digital loop starting with the rising edge of the seventh ACK signal to the reseting of U34 is limited in speed only by propagation delays.

State Machine: Ring Counter

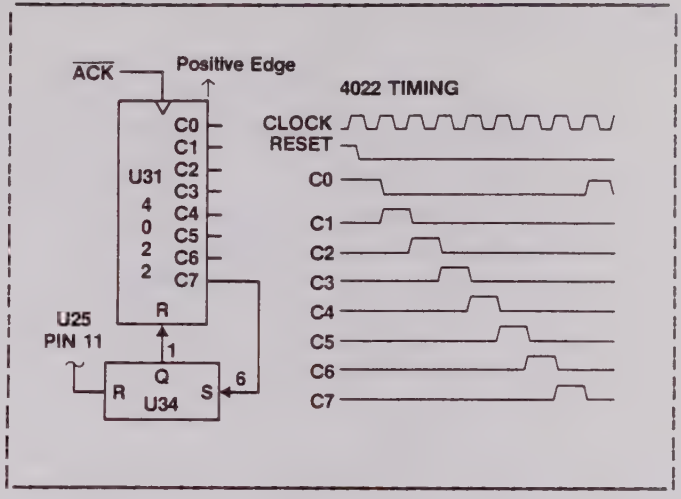

3.4.20
Lets examine the seven states starting with the C0 state. After any decision period or a master reset, the counter is cleared to a C0 state. This state enables auto zero or subtraction networks and disables the write strobe from U33, pin 9. Lets assume an auto zero period where U34, pin 13 would be commanded to a one by the controller on ID1 from the previous reading. TP1 is high when in auto zero. This sets both flip flops of U35 in preparation of the buffer input from the RT bus. Channel X is also enabled by U35 during auto zero.

The First State: C0

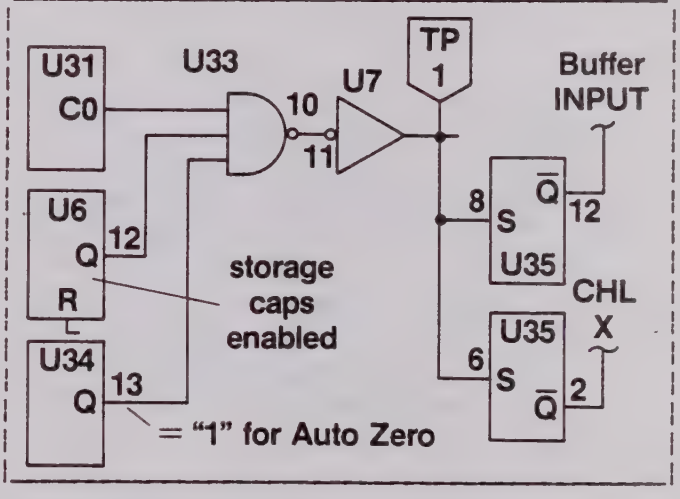

3.4.21
The high state of TP1 also resets the current switch registers preparing them for the first polarity sample from the RT bus input. Following the signals from U35 and U6 through U26 shows that to turn the Channel X FET on, the transistor U17 must be turned off.

Following the C0 State

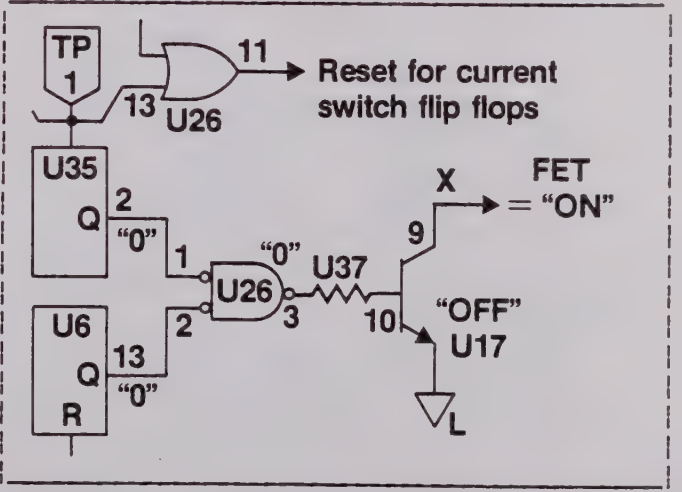

3.4.22
The second state, C1 is initiated when IC2, IC3, and IC4 go high to write data from the controller into the data latches. This write strobe is inverted by U7 and used to disable the storage capacitor by setting flip flop U6. The rising edge of write then clocks U31 to the C1 state. While in the C1 state, the d/a current switch registers are cleared, the reference voltage is set to zero, and the polarity of the RT5 line or remainder amp is read.

The Second State: C1

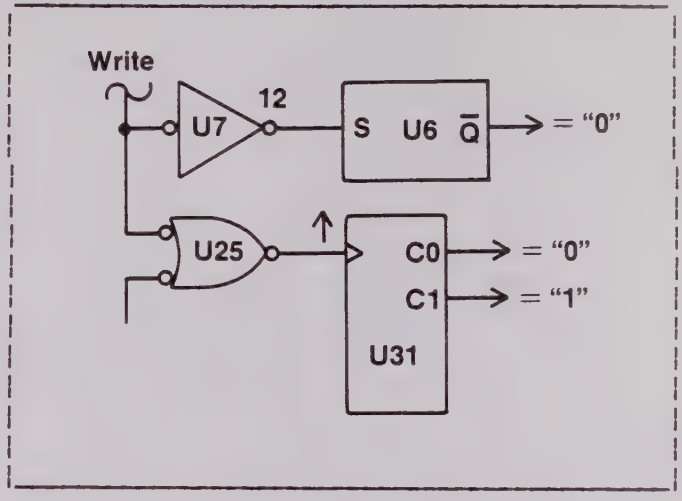

3.4.23
When C1 is high, A1 and A2 are held high through U16, U8, and the transistors of U15. The combination of A1 and A2 being high configures the output of the switching reference voltage to zero volts at TP5. The current switches are also held in reset via U26 in the C1 state.

Following the C1 State

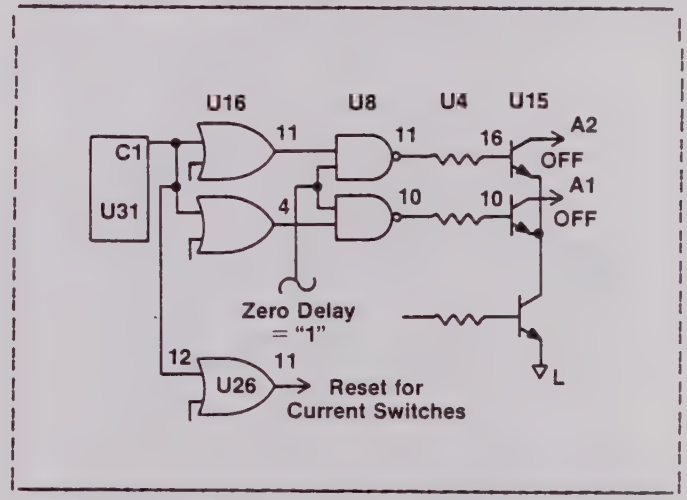

3.4.24
The next event is initiated by an active low read strobe, (IC1 and IC2 go high). This clocks polarity data into U6 on the falling edge of U33 pin 9, (rising edge of U7 pin six). The controller reads the polarity from U5 after receiving the ACK signal from the A/D. When the read strobe goes high, U31 is clocked out of its C1 state. The inverted edge of this event, (U21) clocks the polarity into U11 and clocks a one into U1 to turn the most significant current on.

Third State: C2

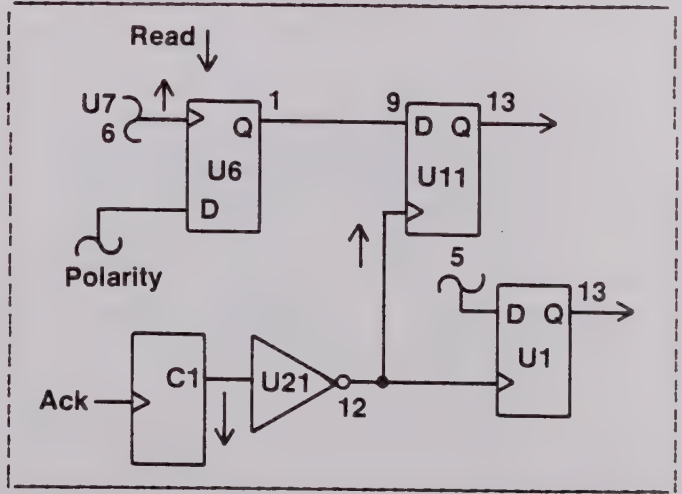

3.4.25
U11 latches the original polarity of the input from the RT bus. This information controls the switching reference through U16 and U8 and compares the polarity through U25 and U16 after each current is subtracted. The data output from compare stage U16 pin 3, is presented to the data inputs of the current switch registers. If the polarity changes do to a switched current, the data output from the compare stage is a zero, which turns the switched current off.

Following the C2 State

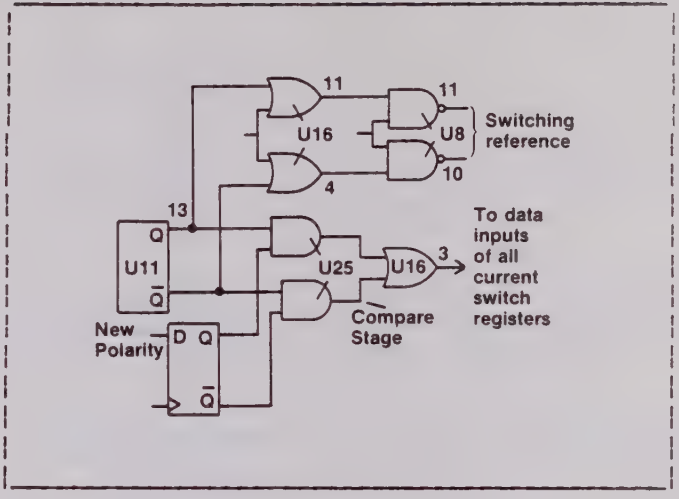

3.4.26
The next four states of U31, from C3 to C6 are identical in function. First the current switch is turned on, then a comparison is made, and if the polarity changes the switch is turned off. If the polarity remains the same the switch is left on. A two stage register representing all the current switch registers is shown here. First, the CX event clocks a one into flip flop 1, which sets flip flop 2 and turns the current switch on. The comparison is then made and the resulting data is clocked into flip flop 2 by CX+1. If flip flip 2 is clocked to a zero, its Q output resets flip flop 1.

C3, C4, C5, and C6 States

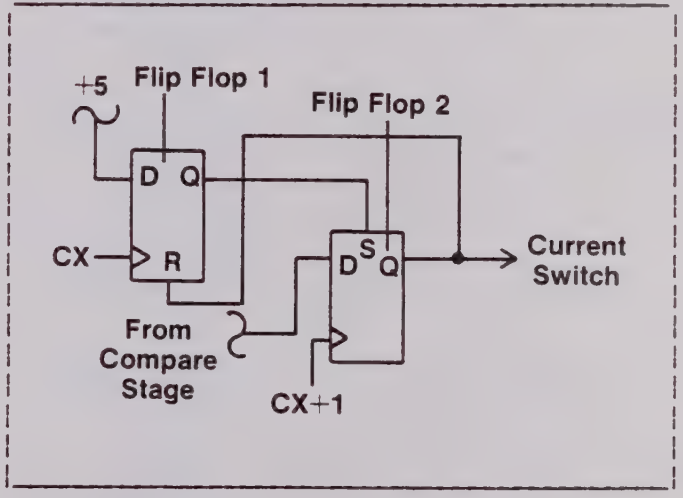

3.4.27
A 12uS delay reduces settling times when the auto zero period is entered. The total delay is a combination of the two identical time delays set by C2/R5 and C3/R6. The first delay is triggered when U33, pin 10 goes low, discharging C2 through R5. When the voltage at U8, pin 2 reaches a value of about 2.5V, its output switches high, charging C3 through R6. When C3 charges to 2.5V, the output of U8, pin 4 switches low, enabling the Z1 and Z2 FETS and disabling the A1 and A2 FETS through U8.

Zero Delay

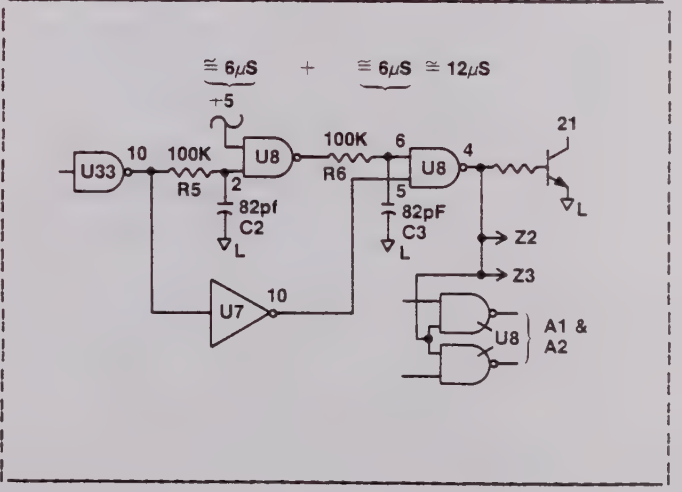

3.4.28.1
The controller's program that runs the A/D follows a predictable sequence of sending function words and reading polarity data. This flow chart shows the control sequence for taking a single A/D reading and how the A/D hardware responds to commands sent from the controller.

Flow chart of A/D sampling program

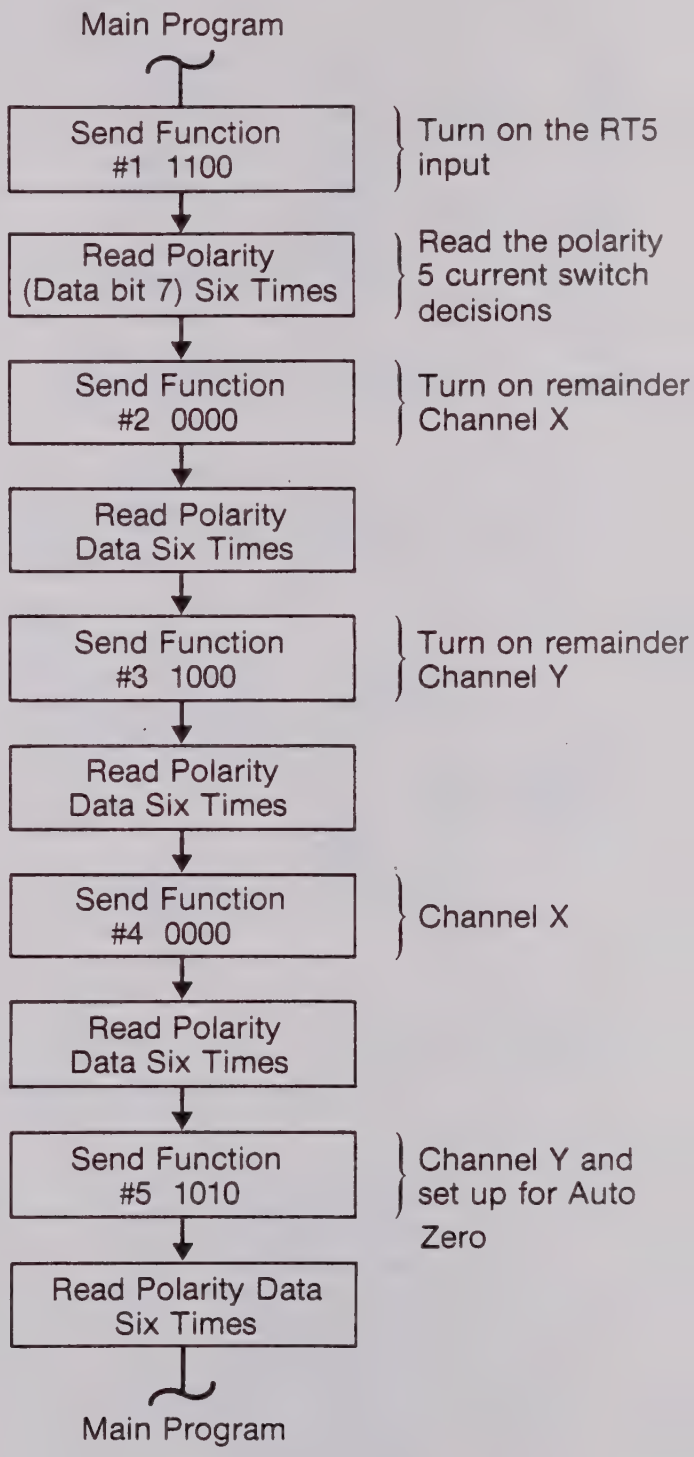

3.4.28.2
The controller begins the A/D process by sending the first function word, XXXX1100 to the A/D module. The most significant four bits, (XXXX) are 'don't care' levels and are not read by the A/D. When decoded, the first function word, (1100) yields: Channel Y, Buffer on, no auto zero, and no reset. The second function word, (0000) tells us that Channel X is on, remainder is on, no auto zero, and no reset.

3.4.28.3
Examining the flow chart further it becomes obvious that the sequence is predictable. Always sending a function word, then reading the polarity six times on data bit 7. This sequence can be verified on a dual trace scope by triggering to the first event, (exit of auto zero) and examining the five discrete command and read sets. Since the entire A/D process takes a little more than 1.2mS, all five command sets can be viewed by setting the sweep speed to 0.2mS per division and externally triggering to a negative transition on TP1 of the digital board.

3.5.0
The controller directly and indirectly addresses the front panel module by combining Interface Control lines IC0, IC1, IC5, and IC6 with ID7. Four distinct function groups are selected: annunciator data, register 1; digit data, register 2; LED enable, register 3; and the control switches. Each function, when decoded sends the ACK signal back to the controller through U19, U11, and Q10.

Addressing The Card

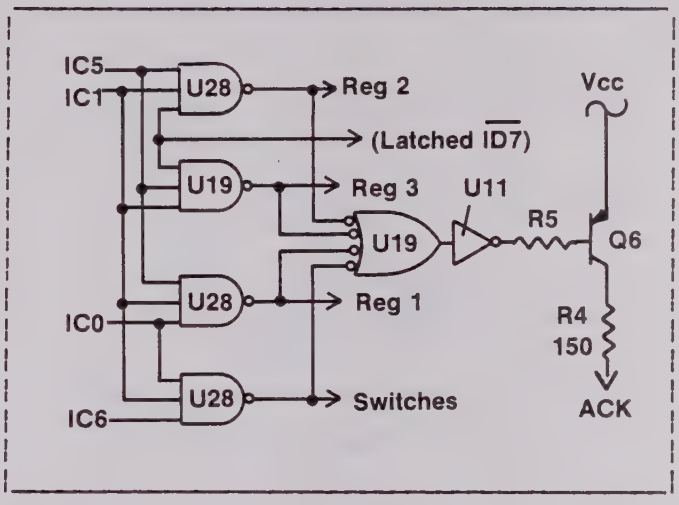

3.5.1
The logic level of ID7 is latched into U23 whenever register 1 or register 3 are addressed. U23's inverted output at pin 12 then enables registers 2 and 3. Typically the sequence is this. The controller addresses register 1 with ID7 low to enable registers 2 and 3, then register 3 with ID7 high to disable registers 2 and 3.

More Addressing, this time with ID7

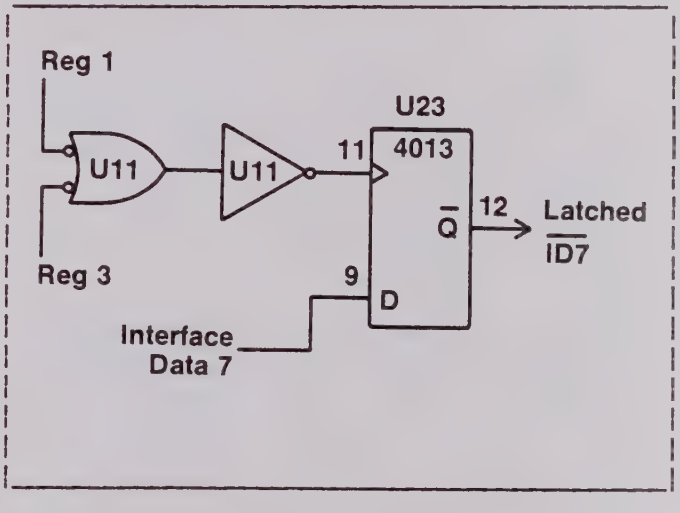

3.5.2
The controller executes a routine represented by this flow chart to service the front panel display and keyboard switches. Clearing all three registers implies that the controller must access the front panel three times with the appropriate addresses. To load data and enable annunciator and digit data is three more accesses. The controller then check the keyboard. This means that the controller accesses the front panel seven times, and expects seven ACK signals for each mark interrupt.

Front panel update sequence

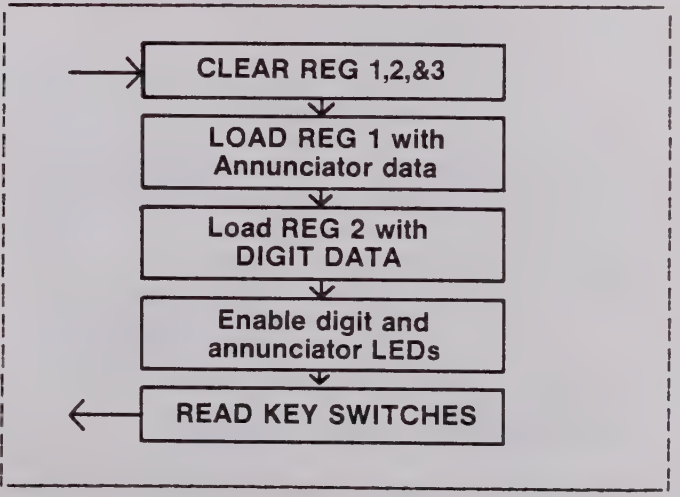

3.5.3
The controller's seventh and final access strobes the kill timer, keeping the display enabled. Kill timer U18, is a re-triggerable monostable that times out if its not triggered at a fast enough rate. C3 and R8 set the kill circuit time constant to about 12mS. The display is updated by the controller every 'mark interrupt' or about once every 2mS, (8 times 60Hz line frequency). C1 and R3 form a power on reset to blank the display on power-up.

The Kill Circuit

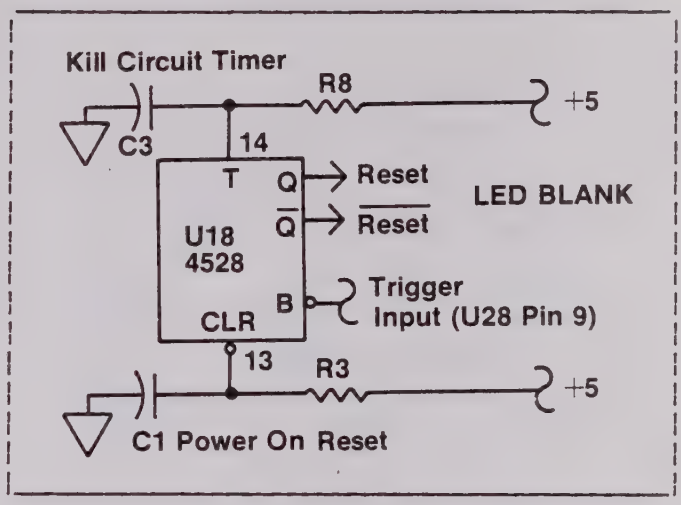

3.5.4
Annunciator data is written into U27 and U16, (register 1) and U16 and U3, (register 3) to enable the LEDs through Qx. When the transistor in U25 and Qx are on, current flow through the LED is about 40 to 50mA. This current is pulsed on and off at a rate high enough to avoid any noticeable flicker and to keep the LED from burning up. Each annunciator package, U12 through U15, U24, and U26 take turns being enabled under control of register 3. Register 2 is configured in a similar way, with register 3 controlling the multiplexing.

Annunciator data registers

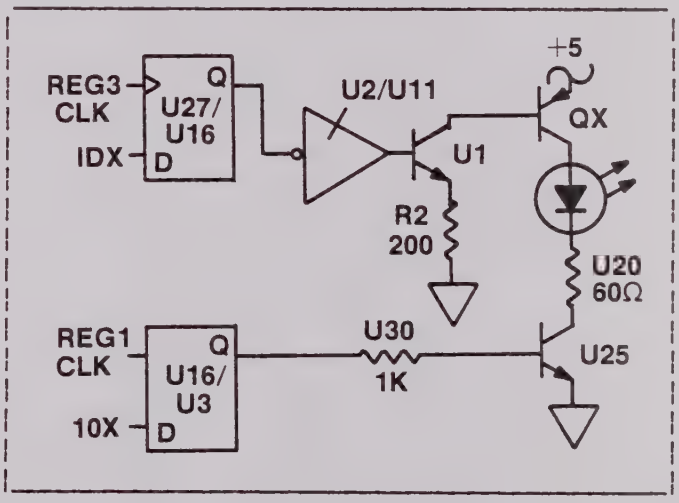

3.5.5
The switch matrix is represented by these four switches S3, S1, S18, and S14. The same data stored in U3 that enable annunciator and digit LEDs, also enables one of six switch rows. U32 is then enabled, and the switches are read by the controller. If, for example S3 were pressed closed, the logic level at U32, pin 14 would be low only when that row was selected. Blocking diodes on each row of switches prevents one row feeding into another when two or more switches are pressed at the same time.

Push Button Switches

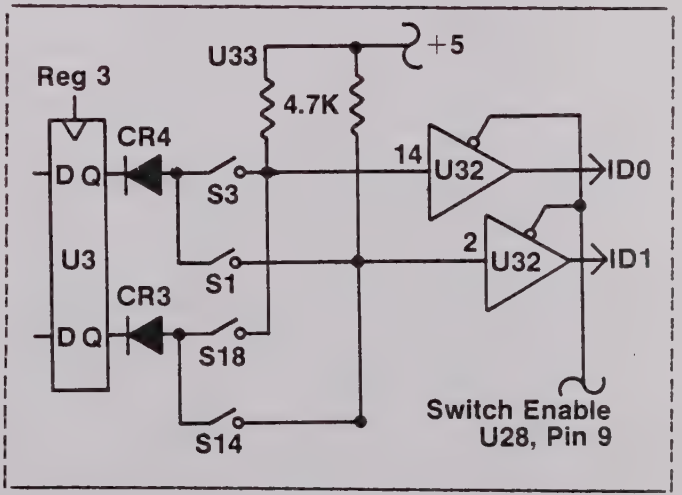

3.5.7
The analog input on the front panel connects binding posts J1-J5 to the mother board's high quality bus. Source HI is protected from sustained over currents by F1, and short current spikes by L1. E1 is a 400V spark gap that protects input LO and Guard. F2 prevents excessive current between Guard and input LO.

Front panel binding post and fuse

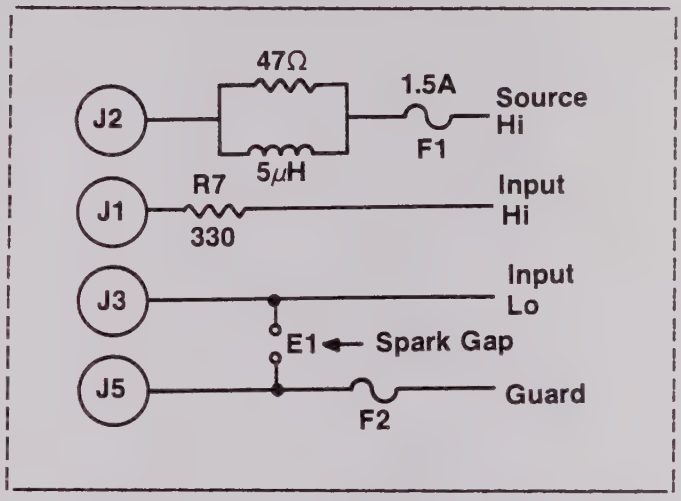

3.6.0
Controller cards used in the 8500 series have evolved from a dual board to a single board module with the latest model being used in all the 8500 instruments. Performing extensive repairs on the obsolete older controller is impractical so the detailed theory will only cover the latest controller. The evolution of the 8500 has not excluded the use of the 8080 microprocessor itself so if you are unfamiliar with this processor you may want to study the 8080 appendix at the back of the workbook.

Controllers - Old & New

8500 Controllers:

out with the old,

in with the new!

3.6.1
The input line frequency is routed from the power supply to the controller module on the RT5 line. This signal is filtered by R10 and C14, then clipped, buffered, and squared by U27. U27's output at pin 3 is a 5V square wave with the same frequency as the line, either 60 or 50Hz.

Line Frequency Conditioning

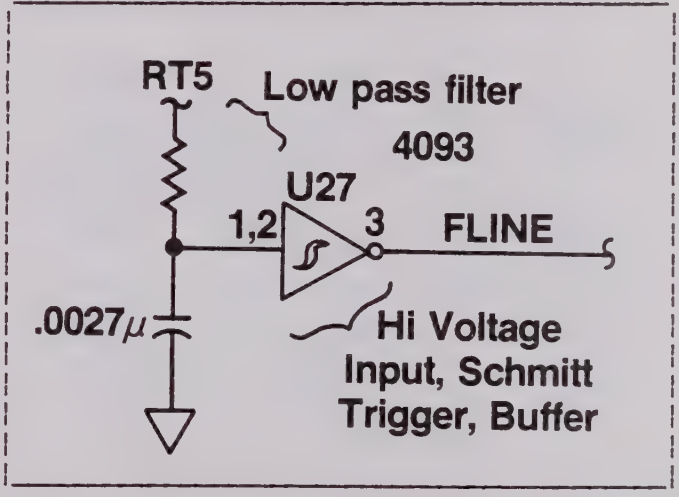

3.6.2
The reset circuitry on the controller module consists of U2, U3, and U10. When power is initially applied to the controller U2 is held in reset for about 1mS by RN1 and C3. When RN1 and C3 time out, the first positive line cycle triggers U2, enabling counter U3. When U3 counts eight line cycles its Q4 output goes high and inhibits any further counting. At the same time the master reset and inverted reset are released through U10.

Reset Circuitry

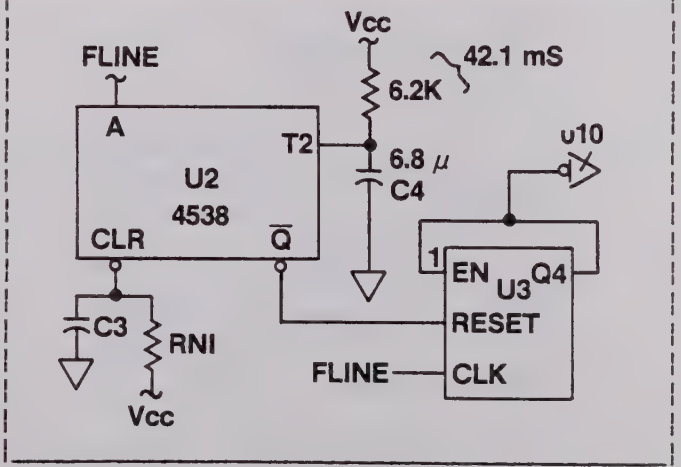

3.6.3
The instrument is synchronized to the line frequency by locking to the line's phase with U4, a 4046 CMOS phase lock loop. U3 divides the output from the PPL's voltage controlled oscillator by eight, and applies this signal to the phase compare input. The PPL forces its VCO to generate a frequency eight times the line frequency input to lock the phase. This signal generates the 'mark' interrupt.

Multiplying the Line Frequency

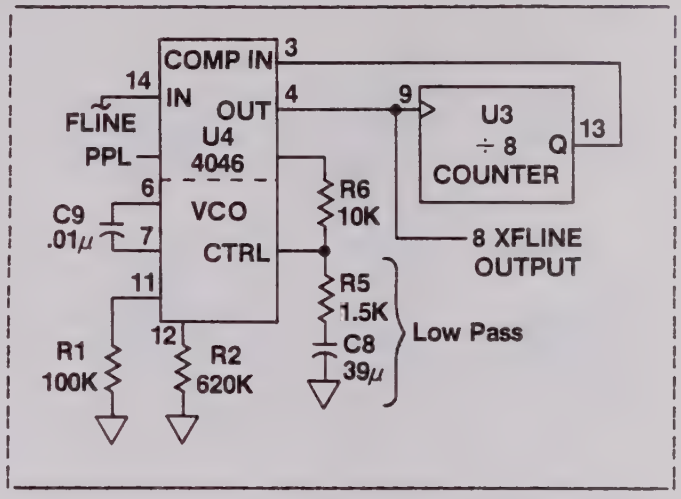

3.6.4
The combination of U6, U5, and U18 enables the controller's on-board memory, mapped from 0000 to 7FFF, (A15 low). U5 and U6 decode the 'data transfer' logic and insure that RAM or ROM are not selected on interrupt or peripheral input/output instructions. The four outputs from U18 select the 2764 EPROMS, U23 and U24, (0000 to 3FFF), the RAM U22, (4000 to 47FF), and the EAROM U20, (4800 to 4FFF).

RAM/ROM Decoding

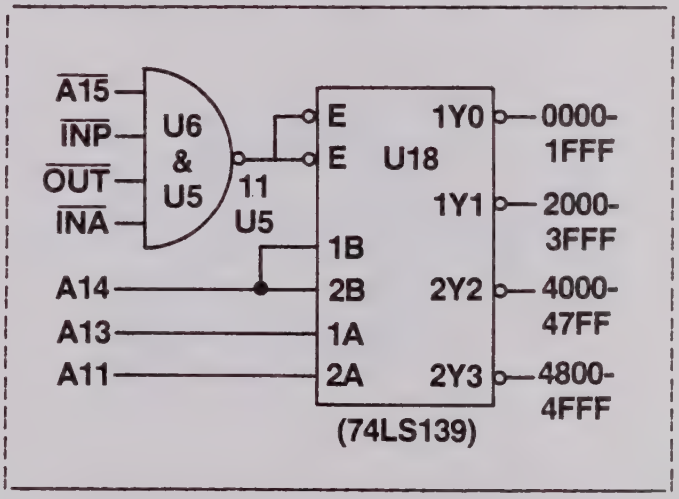

3.6.5
The stored program for the 8500 resides in EPROMs U24 and U23. Both of these devices are 2764s, with 8K locations, each location 8 bits wide. DBIN~ enables the 2764's output drivers. This output enable scheme reduces potential bus contention problems by allowing only one device to drive the data bus at a time.

EPROM Program memory

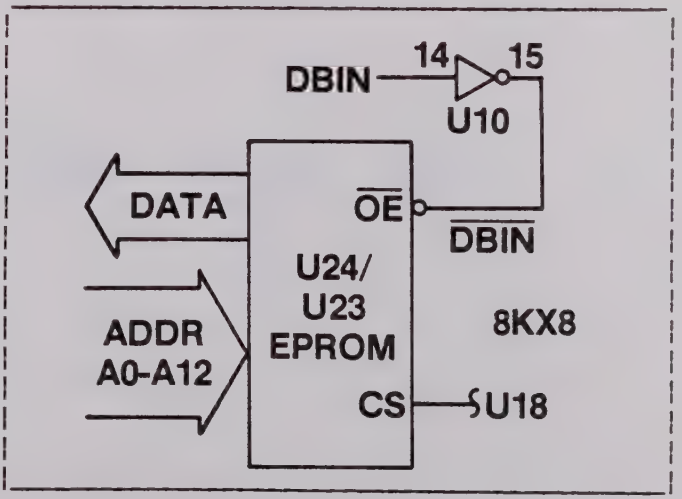

3.6.6
The pinouts for U20 and U22 are identical although the devices have distinct differences. The 2016 RAM IC plugs into the socket for U20, and is at address 4000 to 47FF. The EAPROM is a five volt only electrically alterable PROM, (2816) at address 4800 to 4FFF. This device can be read from like RAM, but requires about 9mS to complete each write cycle. Both the RAM and EAPROM are organized 2K locations, 8 bits wide.

RAM & EAPROM Parameter memory

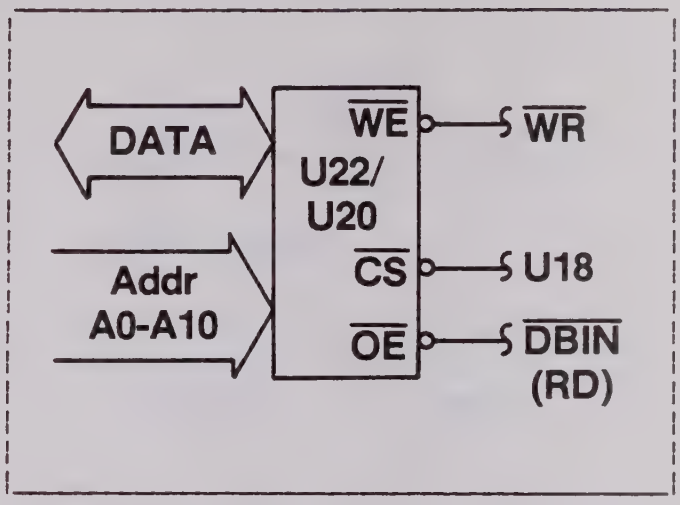

3.6.7
When an 'OUT' or 'IN' instruction is executed the 8080 is 'put to sleep' by U19 and forced to assert its wait signal. When wait goes high ICSET from U14 sets U1. ICSET is disabled by ICENABLE from Q~ when U1 sets. ICENABLE can be disabled by any of four occurrences: reset, interrupt acknowledge, A15~ going high, or if the DBIN goes high with wait retracted.

Enabling the IC Lines

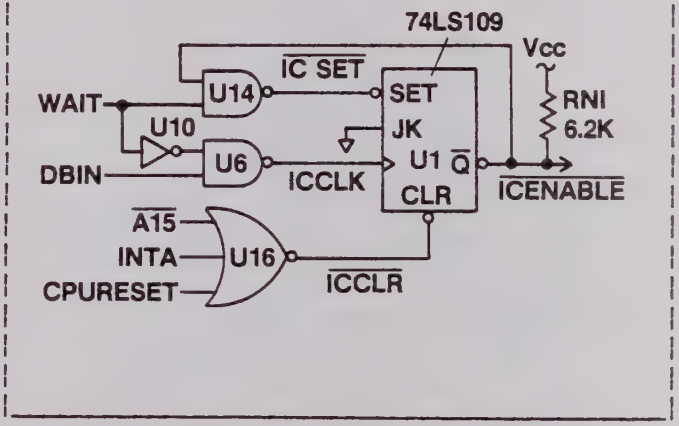

3.6.8
This truth table shows the combinations required to enable the IC lines from U1, Q~. When Q~ is low, address lines A8 - A14 are enabled onto the bus as IC0 - IC6.

Truth table: enabling IC Lines

ICSET	ICCLR	ICCLK	$\overline{Q}$
0	1	X	0
1	0	X	1
1	1		1

3.6.9
Address lines A8 through A14 select various modules in the instrument. These lines are gated and driven by U26 and U17, where they become the six IC lines, IC0 through IC6. When an OUT or IN instruction is executed the 8080's address bus holds the peripheral's port address. In typical 8080 systems A0 - A7 would select peripherals, (up to 256 ports) but since the 8080 copies the values of A0 - A7 to A8 - A15 on all OUT and IN instructions, these lines do the same job.

Interface Control Drivers

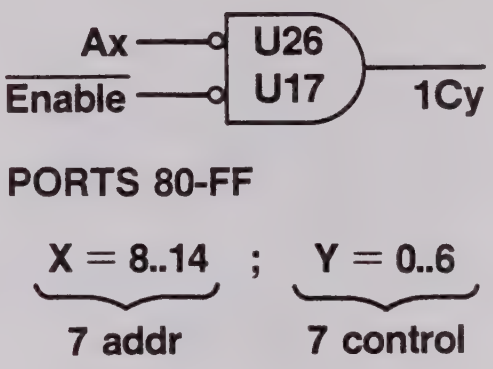

3.6.10
The interbus data lines, ID0 - ID7 are enabled when the 8080 addresses the upper half of its port memory, from 80 to FF, (A15 = A7 for INs and OUTs). A15~ enables U25 while DBIN controls the signal direction either in or out for reads or writes. ID lines ID0 - ID6 are pulled low by RN3, 2k resistors. ID7 is pulled low by R11, 10k. Data lines D0 - D7 are routed to on board memory.

Interbus Data Buffer

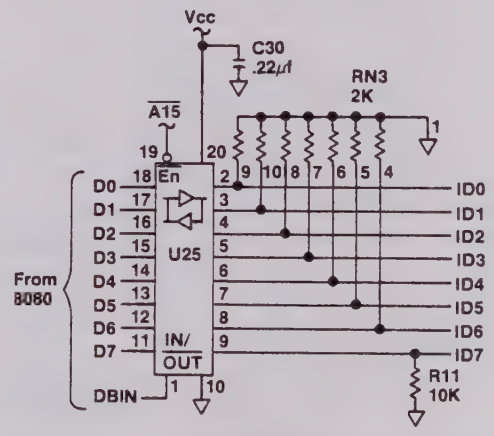

3.6.11
The 8224 clock IC, U19 uses Y1 to generate both phase 1 and phase 2 clocks. It also provides the 8080 with timing and control logic for reseting, strobing the status machine cycle, and controlling the ready status. The clock signals swing from zero to plus twelve volts and have a total period of 1.7MHz, (15.36M/9).

The 8080 and Clock Circuit

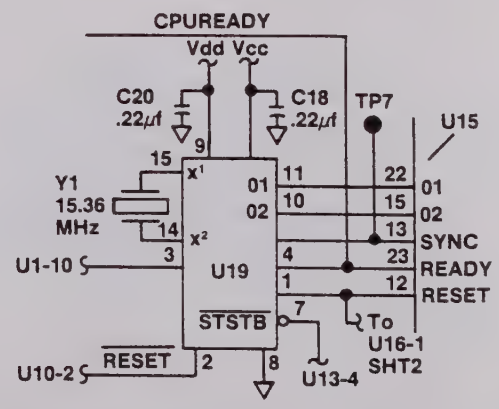

3.6.12
Each time the 8080 addresses an external module, (ohms, current, a/d, etc...) the processor is put to sleep by holding off the ready signal to U19. Since all external modules have port addresses above 80, A15 will be high, and when the STSTB occurs U5 clocks a zero into U1. The addressed module now responds by asserting its ACK, (active high) signal back to the controller to R8 and U16. The combination of R8 and C13 produce a delay, (about 1.6uS) to the input of U16, then wake up the 8080 by setting U1 and releasing the ready hold off signal.

ACK Stop/Run and Ready

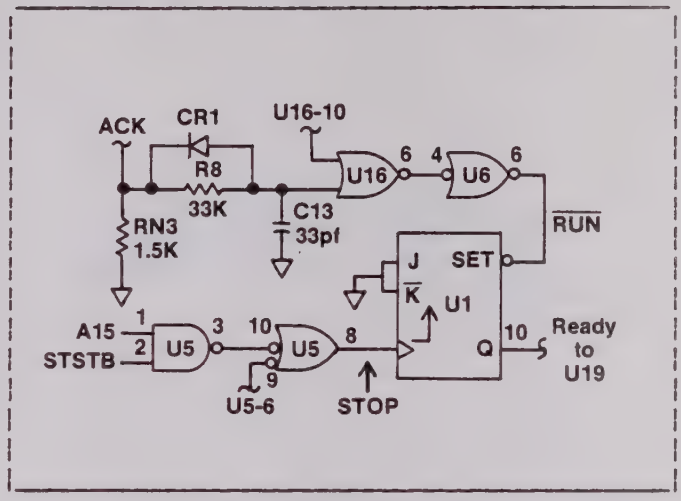

3.6.13
The first state of each 8080 machine cycle is flagged by the sync signal sent to U19. During this period the processor status is available on the data bus and is clocked into U12 by STSTB from U19. The inputs used are D0, D4, D6, and a non-processor generated signal, external interrupt, (EXTINT). The outputs from U12 control interrupt responses, external module addressing and synchronize the external interrupts. Pull up resistors RN2 insure a valid TTL to CMOS logic conversion.

Decoding the Processor Status

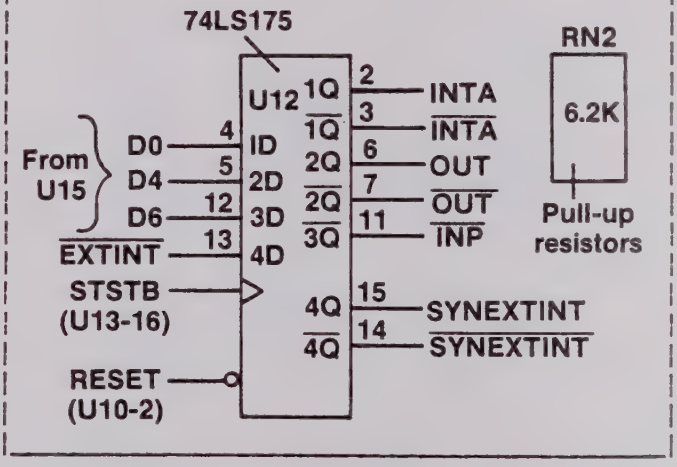

3.6.14
U21 puts the the incoming interrupts in their proper priority by providing an inverted three bit code corresponding to the 'D' input. For example, if ID1 is active, the code on the Q~ outputs is 101. This code is inverted and read by the processor when INP~ and DBIN are active. The processor interprets this code as a RST instruction, which points to one of eight possible restart locations. By examining the encoder's inputs you'll notice that MARK, (D1) has the highest priority, and ACKINT, (D6) has the lowest. The three ID inputs control external interrupts.

Priority Interrupt Encoder

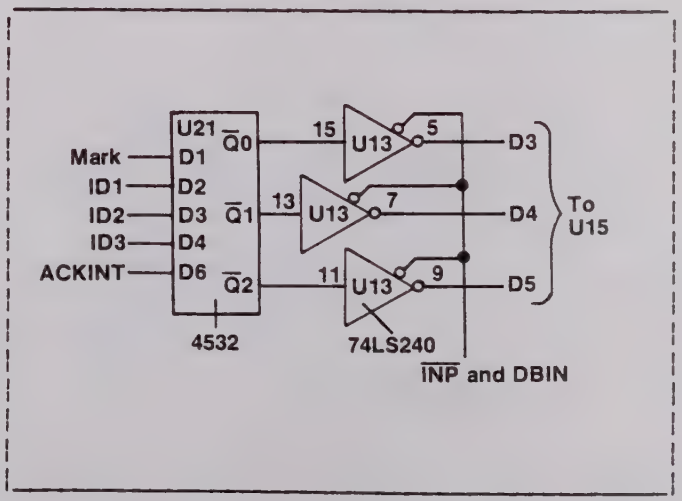

3.6.15
Scan advance is pulsed during the foreground software process to signal a completion of a reading. By executing an OUT instruction to port address 08 the combination of A11 and OUT from the status register sends a single 3uS pulse out U13, pin 18.

Scan Advance

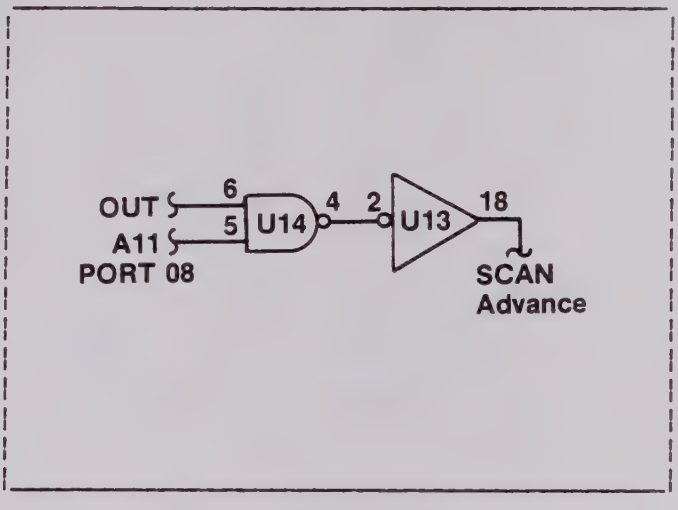

3.6.16
When the front/rear switch on the 8505/8506 front panel is closed, Q1 on the motherboard senses CR1 and pulls pin 5 of U17 low. This signal is enabled on the data bus, bit zero, whenever the processor executes an 'IN' instruction. The status register decodes the IN instruction and forces INP~ and DBIN active, enabling the front/rear switch signal through U13.

Reading the Front/Rear Switch

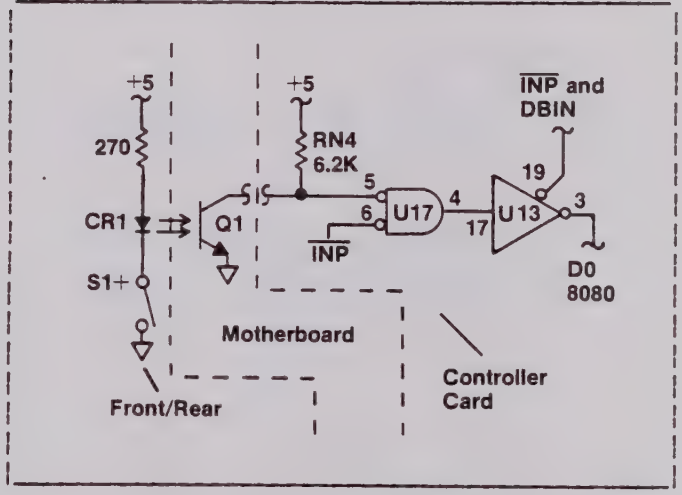

3.6.17
Mark interrupts are enabled by executing an OUT instruction to port 40. This forces A14 high and primes the data input to U9, pin 9. When the 8x line frequency pulse goes high, Q~ at pin 12 goes low and the interrupt line is asserted to the processor through U11. The Q output is sent to priority encoder U21 where it's used to form the RST instruction code, DF.

Mark Interrupt

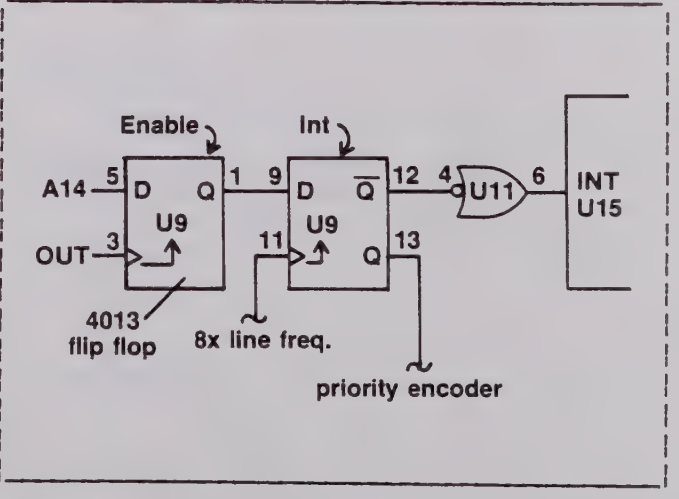

3.6.18
The same signal that puts the processor to sleep to wait for the ACK signal also fires a monostable that insures that the 8080 will not sleep indefinitely. If for some reason the module being addressed does not acknowledge before U2 times out, Q~ goes high clocking a one into U7. This tugs on the interrupt line through U11 and pulses the RUN~ line from U6 to get things going again. When a module responds with an ACK, U2 is cleared and a zero is clocked into U7, keeping Q~ high.

Acknowledge Interrupt

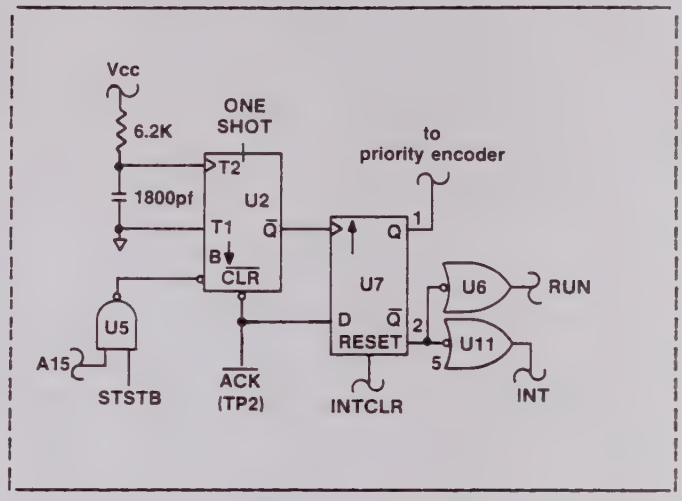

3.6.19
An external interrupt can be generated by a remote interface option, (IEEE, serial, or parallel) or an external trigger input from the isolator module. Since external interrupts can occur at any time, they must be made to appear synchronous to the processor. The way this is done by polling the EXTINT~ line each machine cycle. Its value is clocked into the status register, (U12) by STSTB, (generated by U19). When a zero is clocked into U12, pin 13, the SYNEXTINT signal, U12-15 flags an interrupt through U11.

Synchronous External Interrupt

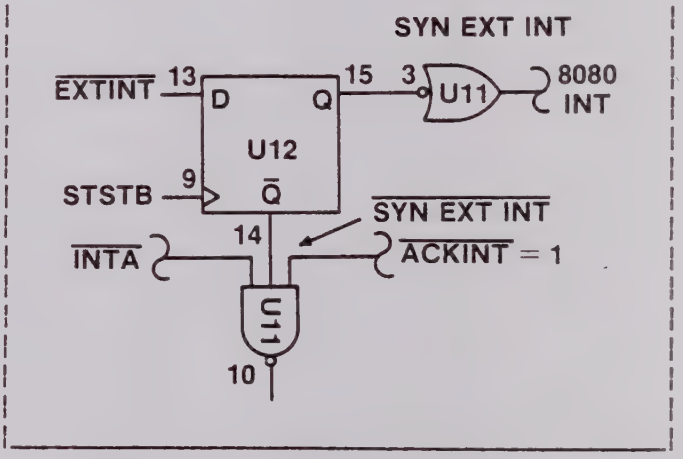

3.6.20
The 8080 requires three supply voltages: +5, +12, and -5. The +5 and +12 voltages come straight from the power supply, while the -5 volts is regulated on the controller by CR3, a 5.1V zener. The bias voltage for the zener comes from the -12V supply through R9. C16 provides additional filtering and C17 traps the high frequency spikes.

Vbb and the -5V Zener

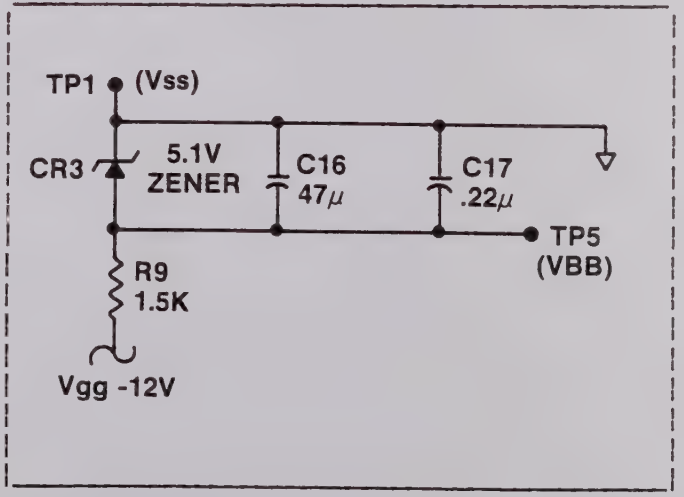

3.7.1
The isolator receives parallel data from the controller, converts this information to serial and sends it across the guard transformers. IC lines IC0 - IC4 are inverted by U5 and U6, then latched in U7. U7 is a 74165, parallel to serial shift register. Data lines ID0 - ID7 are buffered by U1/U2 and latched into U3, another 74165. U7 is cascaded serially into U6 to form a 16 bit shift register. At the bottom is the 'H' and 'G' inputs to U3. These inputs are tied to ground and Vcc to form the start and stop bits recognized by the guarded side.

Digital Side: Parallel to Serial

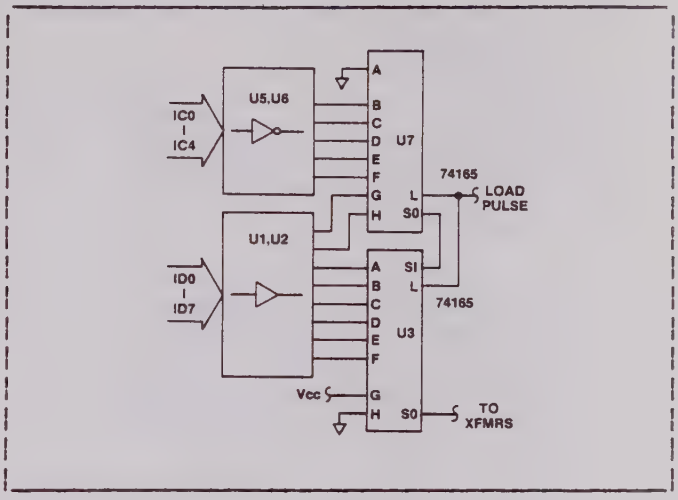

3.7.2
The only data bit read across the guard back to the controller, is bit 7 from the A/D converter. When the 'read function' address is sent to the A/D, the isolator decodes the address and enables bit 7 through U13 onto ID7.

Enabling Data Bit 7 to Controller

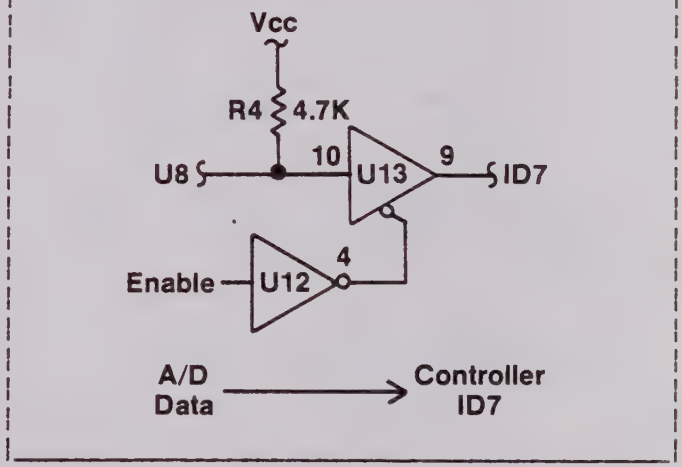

3.7.3
The negative transition of U10-12 triggers monostable U14, (74LS123) low for a time set by R2 and C2. The Q~ output from U14, called the load pulse, strobes the parallel IC and ID lines into shift registers U7 and U3. The inputs to U12 are attached to decoding logic that recognize all the addresses on the guarded side. Since the isolator uses this decoding logic for other functions, we'll refer to active outputs from U10-12 as 'address decode~'.

Parallel to Serial Load Pulse

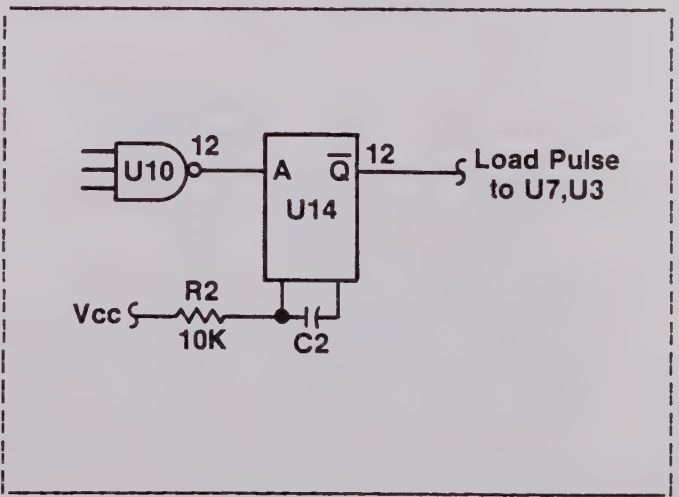

3.7.4
The isolator uses a two phase clock to drive the pulse transformers. The clock oscillator is enabled when address decode~ is low and the load pulse is inactive, (high). This enables U9 to oscillate at around 6MHz. CLK and CLK~, buffered by U11, clock data and address, (ID and IC) information out of U7 and U3.

Pulse Clock Oscillator

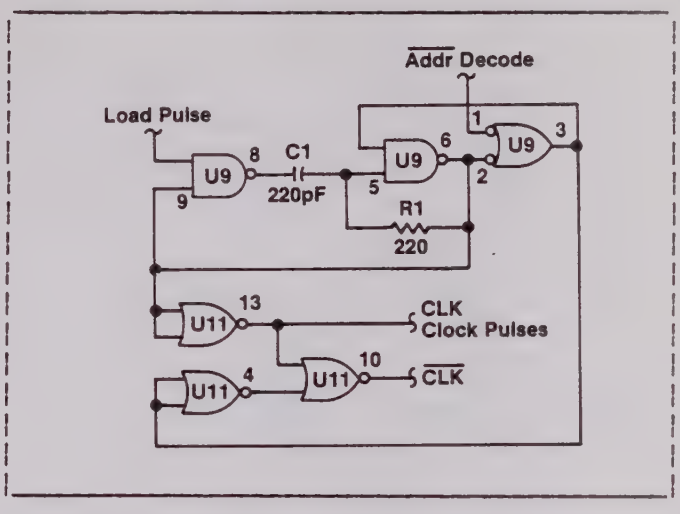

3.7.5
The pulse oscillator's clock controls the timing for transferring information from the digital side to the guarded side. U4 is enabled whenever address decode~ is active. Address decode~ remains active until the complete data transfer has been acknowledged and the controller 'unaddresses' the bus.

Pulse Transformers: Send Clock

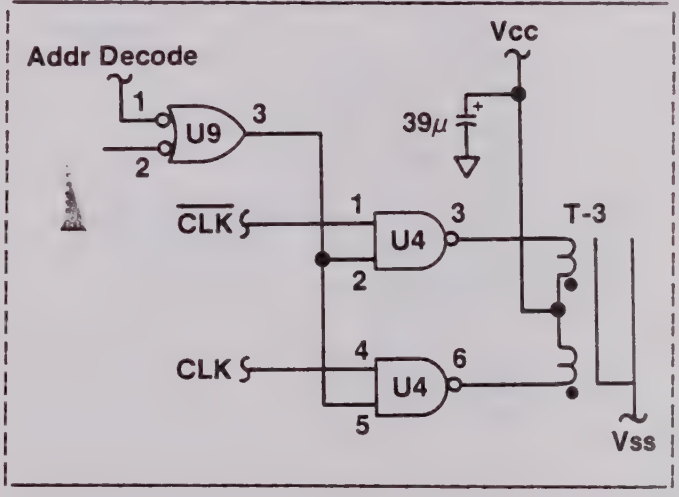

3.7.6
Serial data is clocked out of the shift registers and across the transformers via U4. If the output from U3, (serial data) is a zero, U4 is disabled and no pulse is transferred. If the serial data is a one, U4 is enabled and the pulse is transferred.

Pulse Transformers: Send Data

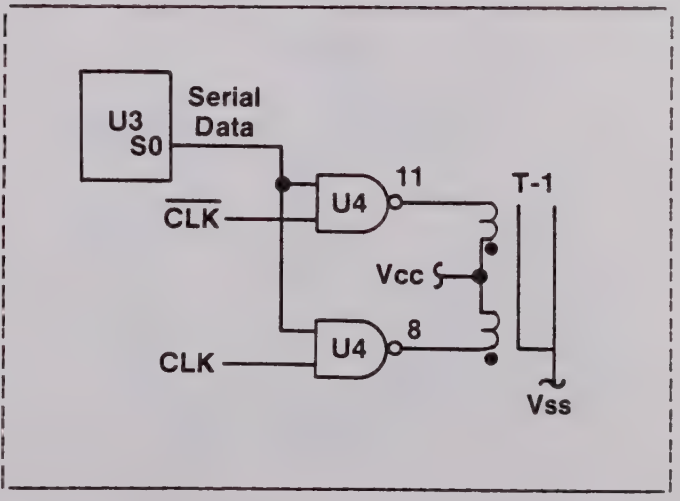

3.7.7
Information is received and clocked into U20 and U16 on the isolated side via T2 and clocked by T4. Pulses from U24-4 coordinate timing on the isolated side. We'll refer to this signal as 'clock'. Data is clocked and serially read into U20 and U16 until the 'H' output goes high, signifying end of transmission, (stop bit). With the data/address completely transferred, the IC lines are enabled onto the guarded side of the bus and sent to the analog modules. The clock is still going and will continue to pulse until the controller 'unaddresses' the module.

Pulse Transformers: Receive

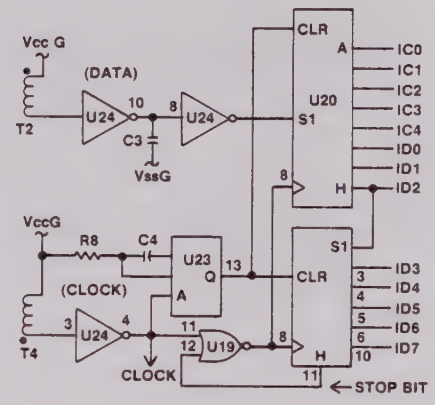

3.7.8
As soon as the stop bit is clocked to the 'H' output of U16, U23 is enabled. The next pulse from the digital side fires U23 and drives Q~ low. This inverts the control lines and enables them onto the isolated bus through U26 and U22. Since U23 is a retriggerable one shot, it will be continually triggered until the clock input goes away. When the complete transmission is over and the clock pulse stops, R9 and C5 time out and Q~ goes high.

Gating the Control Lines

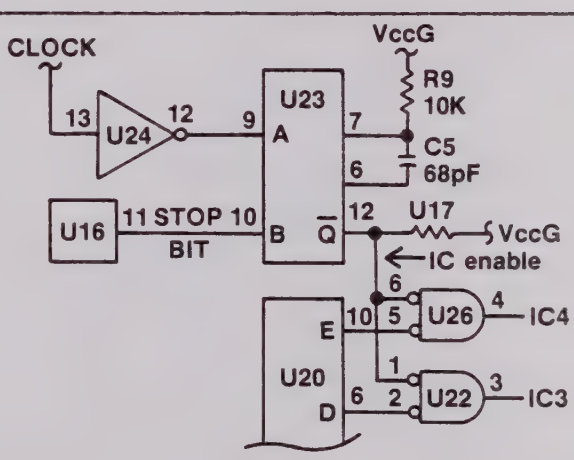

3.7.9
When the address on the IC lines is acknowledged by the addressed analog module, ACK is asserted and transferred back to the controller. ACK is inverted by U25, inverted and enabled by U19, and pulsed across T-8 by U15.

Sensing the ACK response

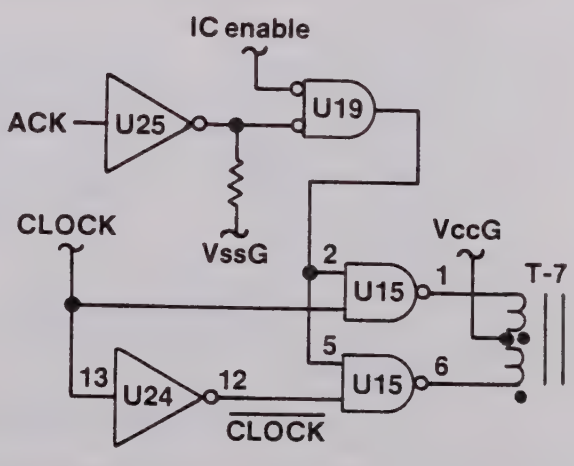

3.7.10
The data transmission loop is completed when ACK pulses start comming across T-7, into U8. This triggers Q high, and the output of U12-3 low turning Q1 on.

Sending ACK Back to the Controller

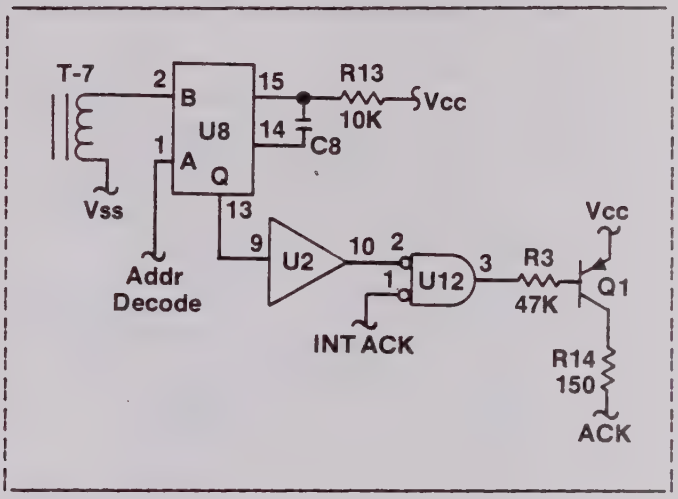

3.7.11
The lower seven data bits, ID0 - ID6 are simply read from shift registers U20 and U16, then buffered by U21 and U18 before being applied to the bus. There are pullup resistors for each of the data lines, but no enable strobe, so the outputs from U20/U16 are always driven on the lower seven data bits, (i.e., no tri-state, or 'floating' levels).

Data Lines: ID0 - ID6

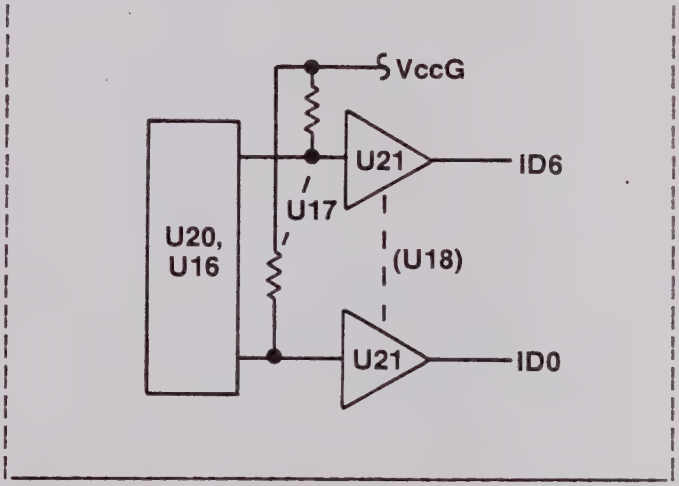

3.7.12
ID7 from the A/D is the only 'guarded side' data bit read by the controller. When the IC lines address '06', U25 and U18 disable U21-13, (tri-state) and enable ID7 to be read through U26 and U19.

Data Lines: ID7

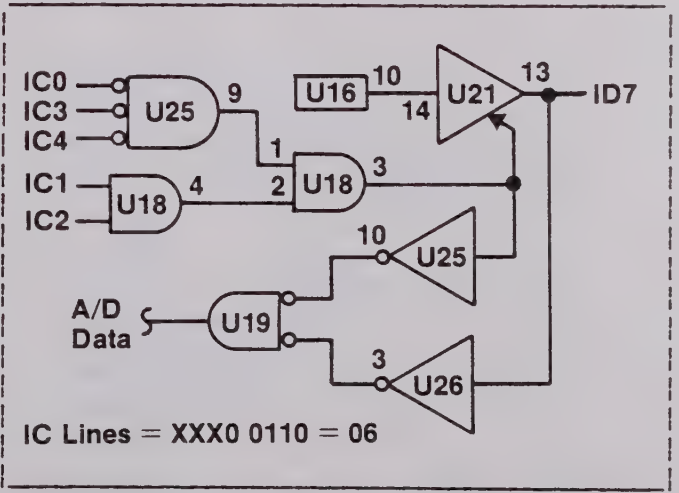

3.7.13
The A/D data is clocked across the guard by U15 from T-6 to T-7. If the data bit is high, U8 is triggered and its Q output will remain high until the pulses stop and R5/C9 time out. U12 turns on tri-state U13 and enables ID7 onto the bus.

Sending ID7 Back to the Controller

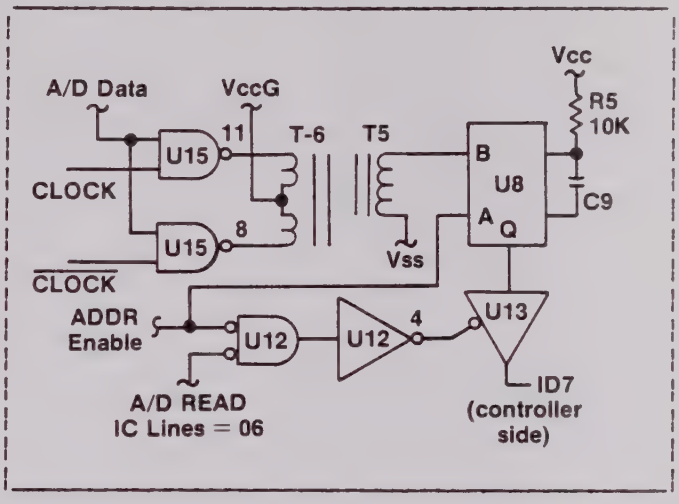

3.7.14
The external trigger input is routed from the back panel of the instrument to the motherboard, and to R17/R18 and U35 on the isolator card. When the trigger input goes low, the low to high transition from U35-10 clocks a one into U31, setting its Q output at pin 1, high. Q2 is then turned on and asserts the external interrupt line to the controller. When the controller acknowledges the external interrupt, (INA goes high) Q from U31 is enabled and read on ID1. The controller uses the level on ID1 to distinguish an external trigger interrupt from a remote interface interrupt.

Trigger Interrupt

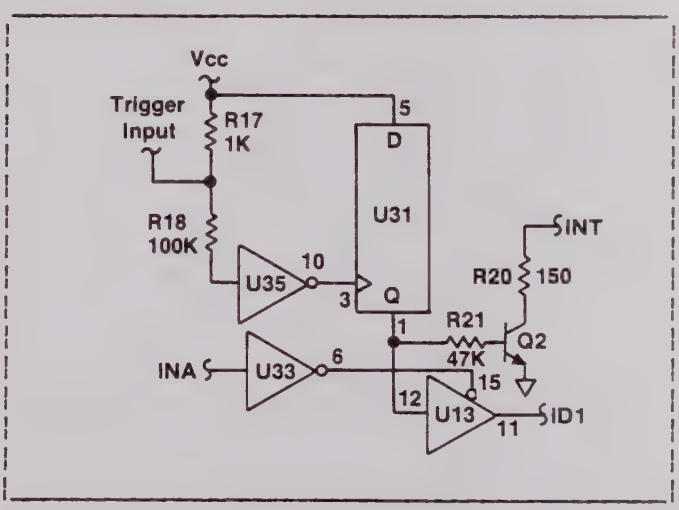

3.7.15
The controller module disables the trigger interrupt by setting IC4, IC5, and IC6 high with ID0 high. This clocks Q, (pin 13) high and resets U31, (pin 1). The controller then sets IC4, IC5, and IC6 high again, this time with ID0 low to clock a zero into U31-9 and enable the external trigger interrupt. R24 and C16 disable external trigger interrupts on power up. Externally triggered interrupts are enabled by the controller, (though U31) when the external trigger mode is entered either from the front panel or remotely.

Disabling the Interrupt Register

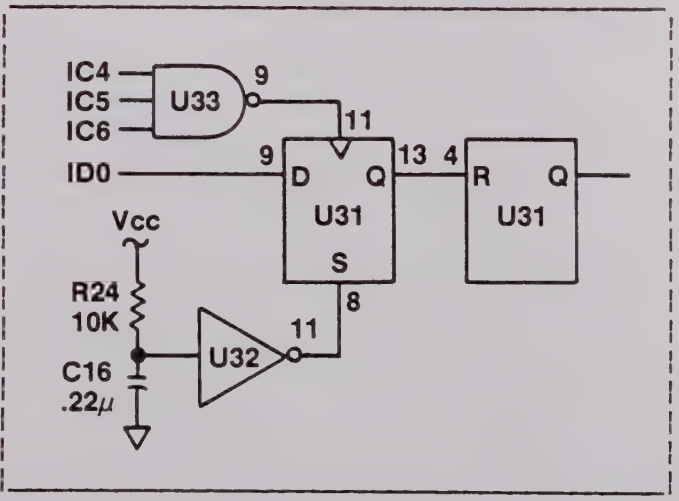

3.8.1
A transformer on the front/rear switch assembly isolates AC inputs from the DC circuitry. From the switch assembly it's routed directly to the TTRMS module though a coaxial cable to K1, K2 and guard. K1 switches in TTRMS common, K2 switches HI to input capacitors C1 through C4. K3 is enabled in the AC + DC measurement mode. In this mode the input caps are bypassed and HI is coupled directly to one of four input attenuators.

Attenuator Card: Input Coax

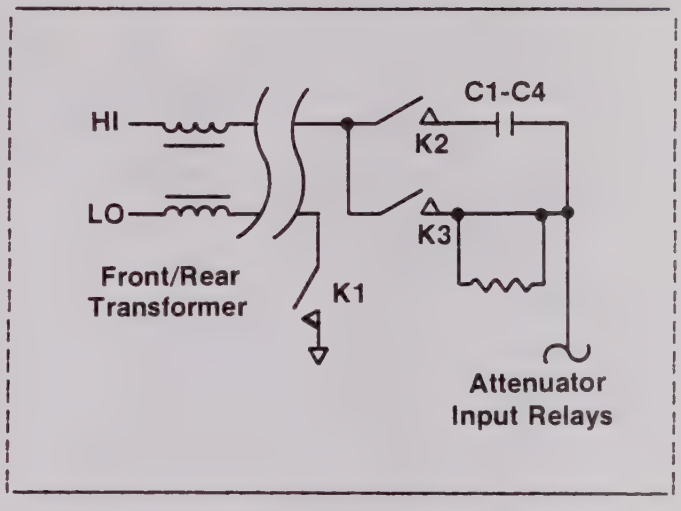

3.8.2.1
K4 switches the input signal to U1, the 0.8x attenuator. U1 designed to minimize the effect of stray capacity by using the 'sandwich attenuator' layout. This scheme physically surrounds the high impedance arm of the divider by the low impedance arm. For this attenuator, the 797.5K resistor is surrounded by two 400K resistors. With R1 adjusted to the center position, the attenuation is:
At = 800K / (800K + 400K||400K) = 0.8
C5 through C12 provide frequency compensation and adjustment.

The 0.8x Attenuator

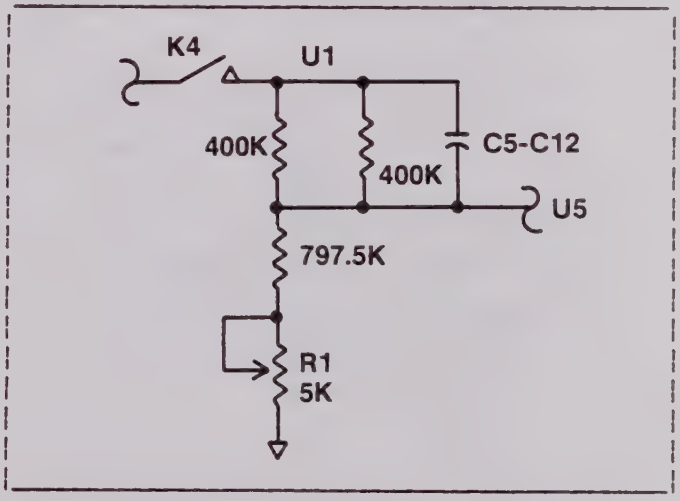

3.8.2.2
When the 0.08x attenuation is selected K5 switches the input signal to U2, another sandwich attenuator. With R2 adjusted to the center position, the attenuation is:
At = 160K||160K / (160K||160K + 920K) = 0.08
An additional feedback signal from the gain amplifier is applied to the attenuated input via coax cable J3 and C31. This feedback path reduces interaction between the 0.08x and 0.8x attenuation circuits. C13, R10, etc., are high frequency adjustments.

The 0.08x Attenuator

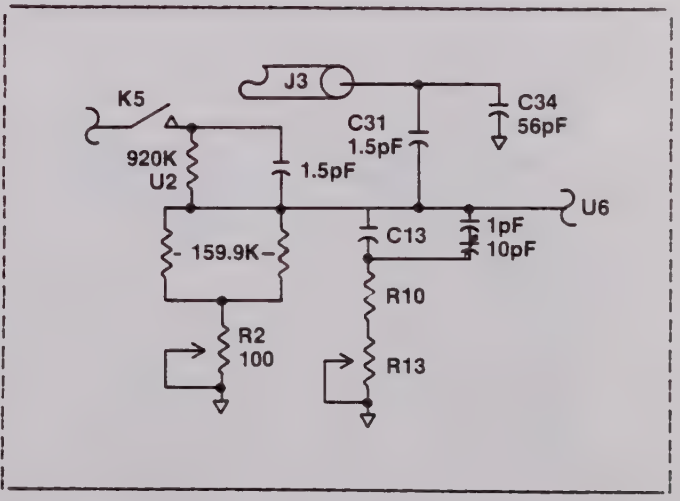

3.8.2.3
K3 switches the input signal to U3 to create the 0.008x attenuation. With R3 adjusted to the center position, the attenuation is:
At = 16K||16K / (16K||16K + 992K) = 0.008

The 0.008x Attenuator

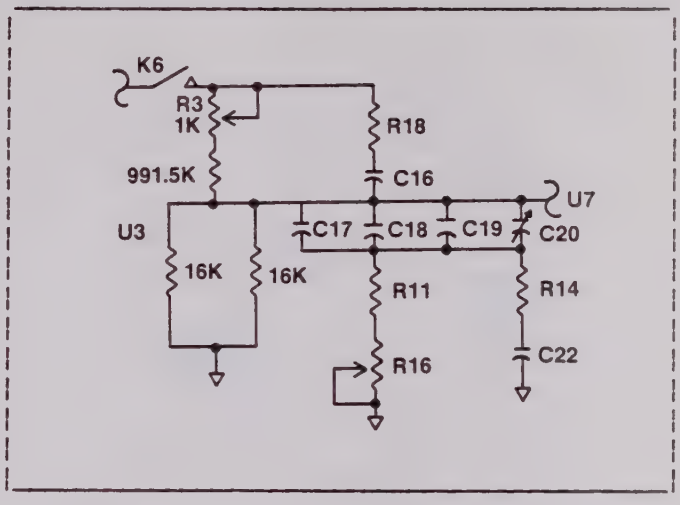

3.8.2.4
K4 switches the input signal to U4 to create the 0.00167x attenuation. With R5 adjusted to the center position, the attenuation is:
At = 3.35K||3.35K / (3.35K||3.35K + 998.3K) = 0.00167

The 0.00167x Attenuator

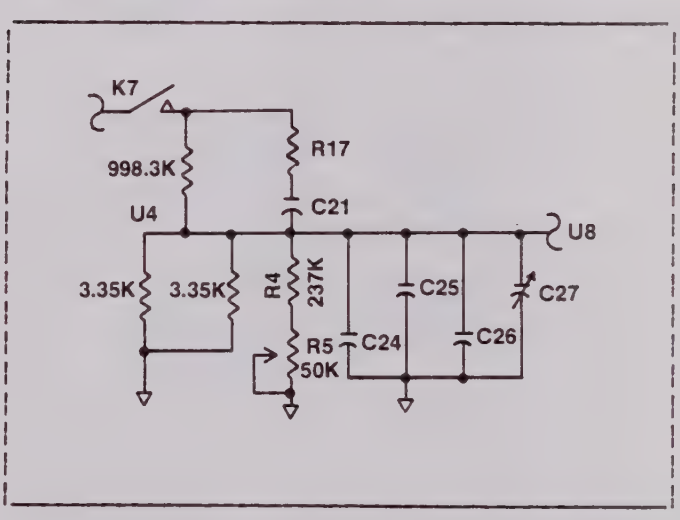

3.8.4
The TTRMS module is addressed by the controller when IC0, IC1, and IC4 are high. This forces the output of U12 low turning Q1 on, pulling ACK high through R7. When the controller receives the ACK signal it retracts the IC address lines and ACK goes low.

Digital Address Decode/ACK

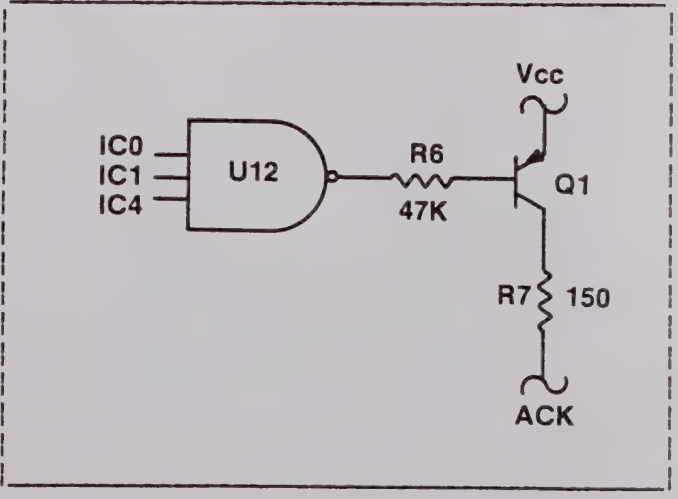

3.8.5
When the controller retracts its IC lines the output from U12, pin 6 goes high latching data on the ID lines into U13 and U14. The latched data and inverted data, (Q and Q~) controls the gain and attenuation FETs and relays. U15 buffers the latched data for controlling sample and hold circuitry. Table 3-2 and 3-3 in the 8506 manual show the data bits used to control the sample and hold, filter, input coupling, and gain/attenuator combinations for all the ranges.

Interbus Data Latches

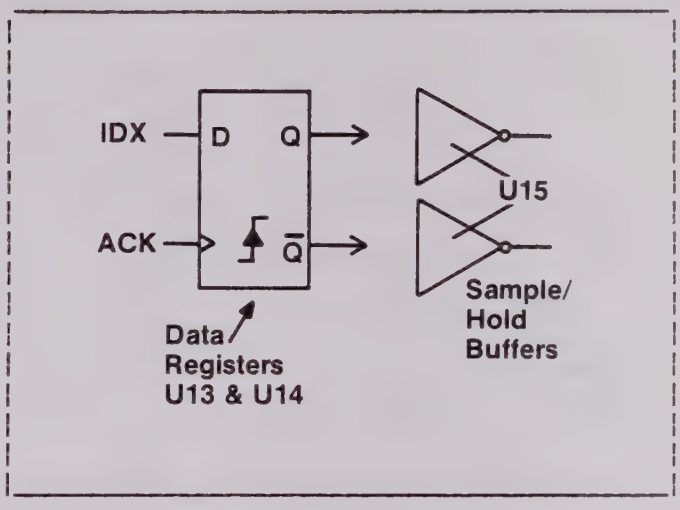

3.8.6
The hibrid analog switches used to multiplex the attenuator outputs, (U5 through U8) are powered by +/-7V supplies. Two zeners, VR1 and VR2 regulate the 7V. Biasing for the zeners comes from the +/-15 voltages from the guarded side of the power supply. C29 and C30 are filter caps for the supplies.

+/- 7 Volt regulators

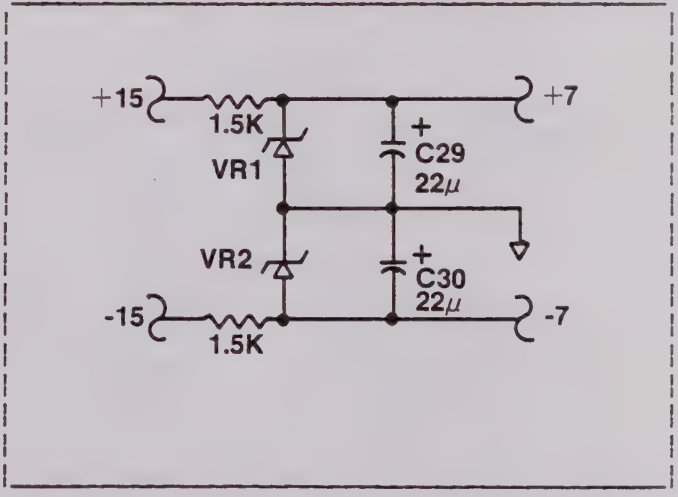

3.8.7
The seven input relays, K1 - K7 are controlled by Q and Q~ outputs from latches U13 and U14. A typical relay drive circuit is shown on the right as Ux. Each package has enable logic, a high current NPN transistor, and a kick back diode that shunts the current charge stored in the relay's coil as it's turned off. The TTRMS schematic includes the 'function' of each relay directly below its designation for quick reference. For example, directly under the designation 'K4' is '(x.8)'.

Switching Relay Drive Circuits

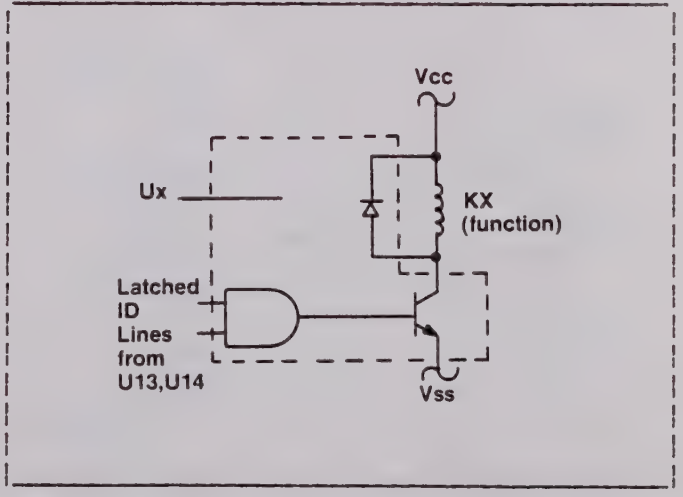

3.8.8
U5 through U8 are hibrid analog switches that multiplex the attenuated input signal to the gain amp. The hibrids include overvoltage protection and present a low and pure capacitive load to the attenuators. When the input voltage to the hibrid exceeds the +/- 7 volt threshold, the diodes turn on and limit the output to about +/- 7.8V.

Attenuator Multiplexing

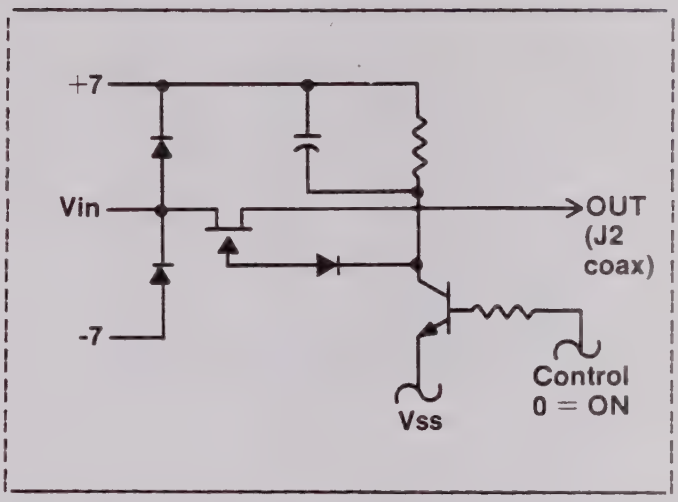

3.8.10.0
The block diagram shows the gain amp as a non-inverting voltage amp. There are three selectable gains for the range amp; x2, x6.25, and x20. The gain amp and attenuator circuits are on separate PCBs connected by a guarded coax cable, P2. The coax shield has a 'driven guard' that taps the negative feedback node as a control voltage.

Amplifier Card: Ranging amp input

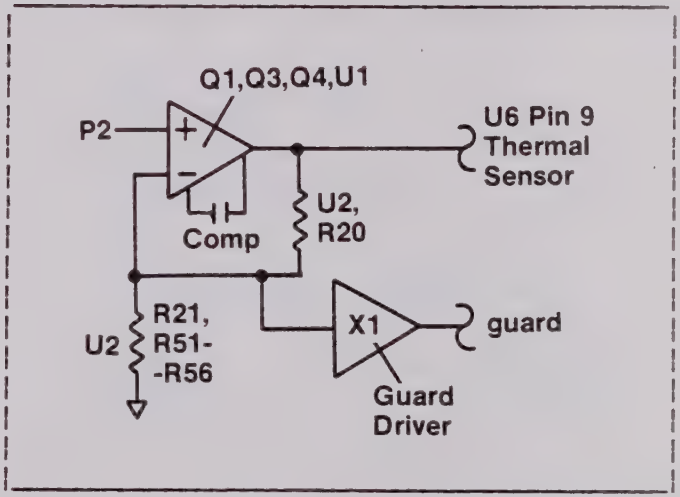

3.8.10.1
The gain amplifier circuitry has its own filtered supply derived from the +/- 15V supply. R8 and R9 in combination with C3 and C4 form a low pass filter for the amp. We'll refer to these voltages as +15A and -15A although their voltages are closer to +/- 14.4 volts.

Amplifier: Power Supply Filtering

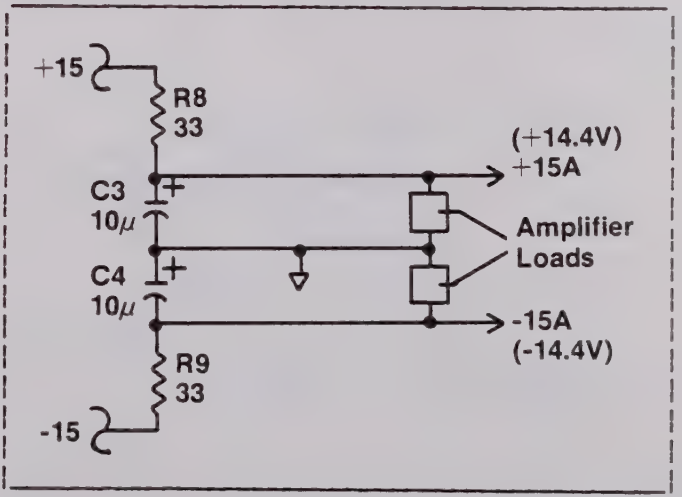

3.8.10.2
Attenuated signals from P2 are applied to dual JFET Q1. This input provides a high impedance, low offset first stage for the gain amp. Q2 is the active load for Q1's drains, biased by Q5 and R1 - R6. Voltages shown are typical DC bias readings taken with the 8506 input terminals shorted.

Amplifier: Dual JFET Input Stage

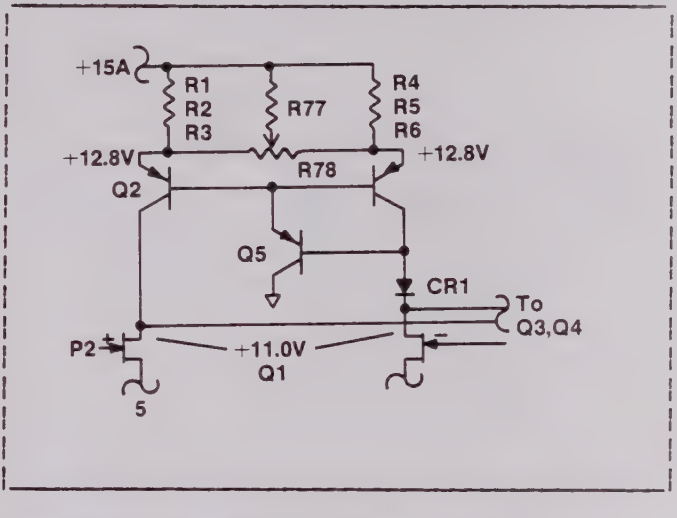

3.8.10.3
Biasing for Q1 comes from Q6. Q7 and VR1 regulate the voltage to R16, keeping the current through Q6 constant. Q7 matches the temperature characteristics of Q6 to compensate for thermal drifts.

Amplifier: Constant Current Bias for Q1

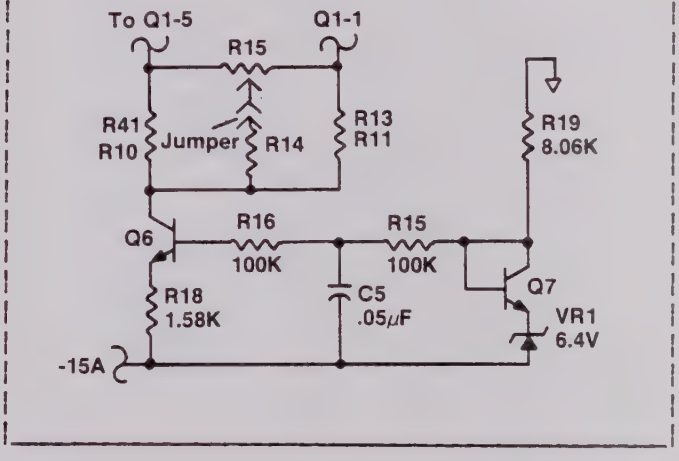

3.8.10.4
Three frequency compensation networks accommodate the gain amp's three ranges. These filers are switched in via Q10 and Q8 when their respective gains are selected. When Q10/Q8 are turned off, Q11/Q9 hold the gate voltage to zero volts.

Amplifier: Switched Frequency Comp

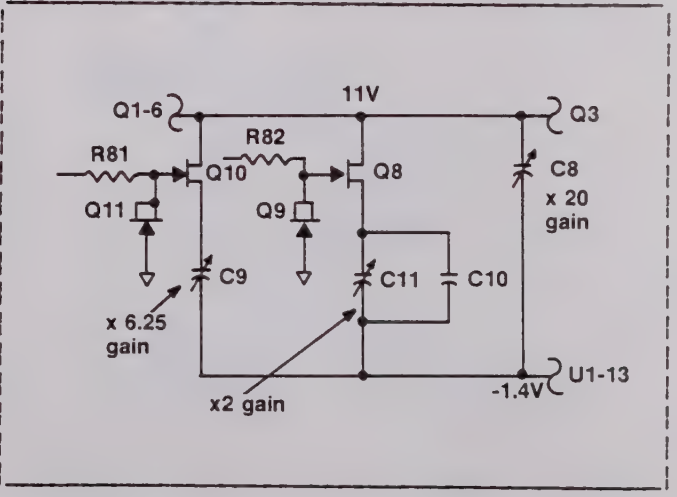

3.8.10.5
R7 biases Q3 and Q4, the input to the cascode gain amp. U1's class b high current output is required to drive the thermal sensor.

Amplifier: Cascode Gain Amp

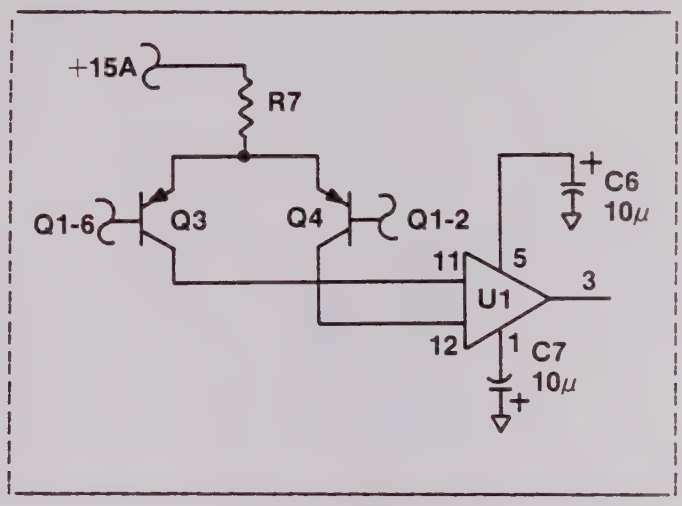

3.8.11
Three feedback paths are tapped from the voltage dividers in U2. The graphic to the right shows the switched feedback for the x2 gain with adjustment resistors R51 and R52. This is typical for the three feedback networks. When the x20 range is selected, (100mV range) R70 and R71 supply the 'driven guard' control voltage. Control voltages are tapping off the feedback nodes for the other gains. Q28 turns off during the 'hold' mode, while R20 and R21 limit the gain to x2. This prevents the amp from overranging and swinging to its rails during the hold periods.

Ranging amp gain paths

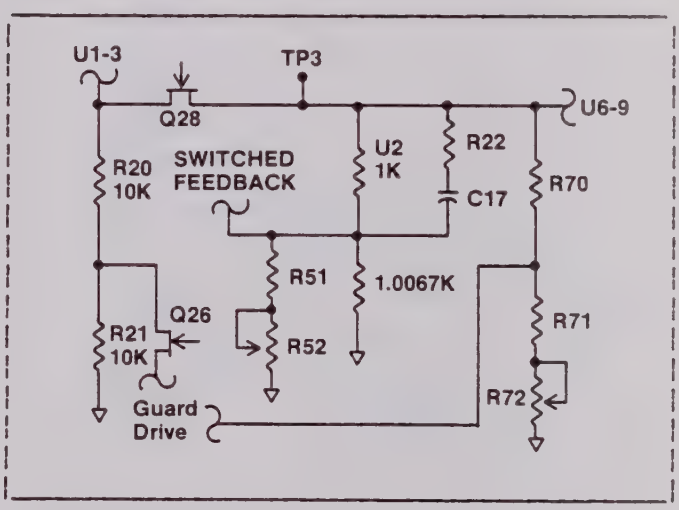

3.8.12
Outputs from the gain amp are applied to the thermal sensor during sample periods by turning Q28 on. One of three feedback paths are enabled by Q12, Q14, or Q16 when Q28 is on.

Amplifier Switching

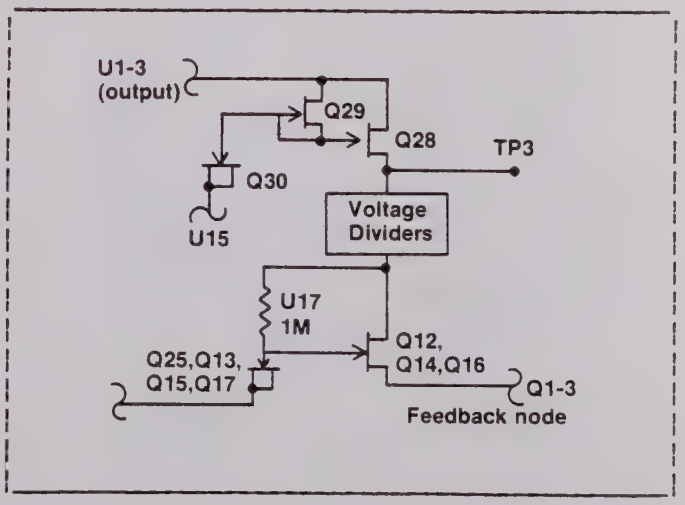

3.8.13
The input transistor of U6, (on the left) is heated when the 400 ohm input resistor dissipates power. Heat from the resistor causes a thermal conversion that varies the input transistor's current flow. The 400 ohm resistor is the load for the range amp in the sample mode, and for Q23 in the hold mode. The transistor is biased into a differential amp and generates a DC voltage into a second sensor resistor, heating the second transistor of U6. When the temperatures of the transistors are equal the sensor circuit is balanced.

Fluke Thermal Sensor

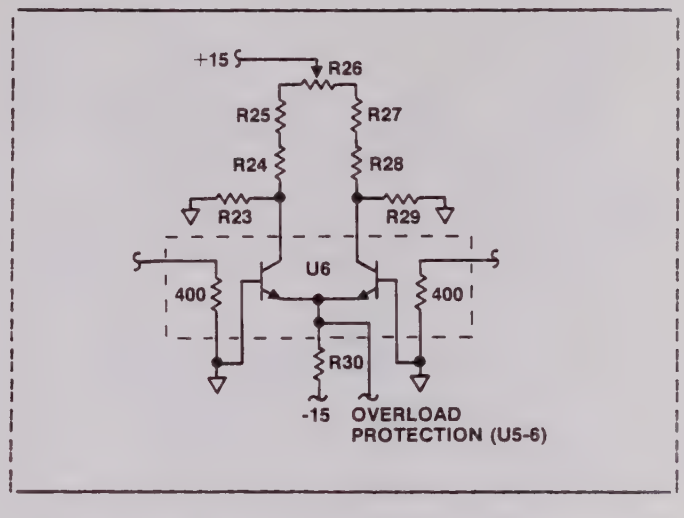

3.8.14.1
Excessive voltages across the 400 ohm resistor can cause the sensor to burn out. U5 prevents this by sensing the voltage at R30 from the thermal sensor. If this voltage raises above the voltage set by R63, U5A's output swings to its negative rail. This triggers U5B to shut down the gain amp. CR14, CR15, and CR16 clamp the voltage of R30.

Sensor Protection: Input

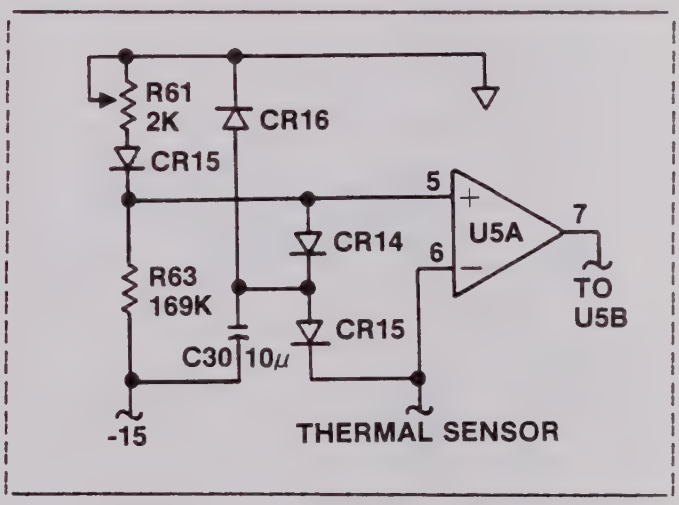

3.8.14.2
Transistors Q25 and Q24 provide a bipolar disable to the gain amp, U1-13. When the output of U5A goes low, Q25 is saturated. The same signal is inverted by U5B, turning Q24 on, holding U1-13 close to analog return, (zero volts).

Sensor Protection: Disable

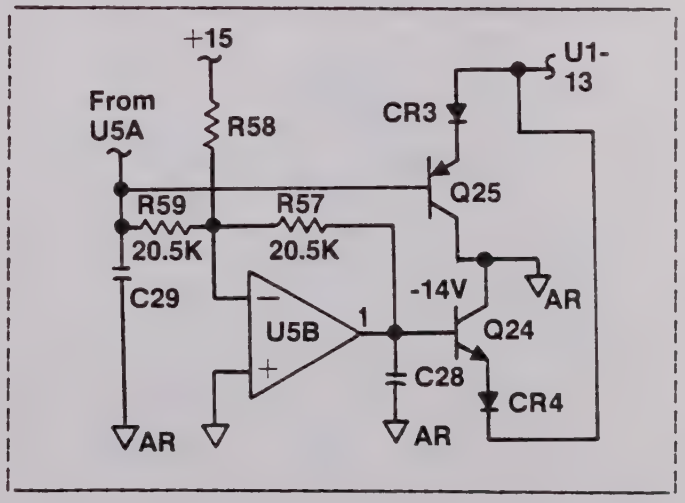

3.8.15
U7 is the gain stage for the thermal sensor. Differential outputs from U6 are converted to a single output and applied to square and square root amplifiers, U8 and U10. The square and square root amplifiers improve the transient response of the thermal sensor circuit.

Sensor Amp

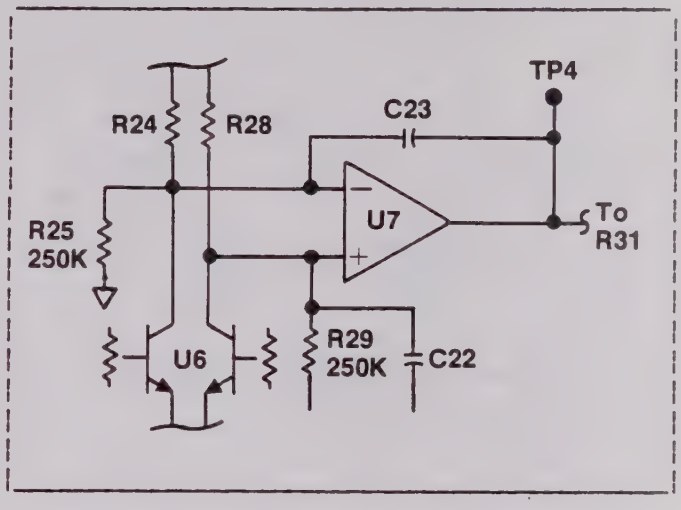

3.8.16.1
U8 and U10 are configured as a log amp that squares the linear voltage from U7. This provides a log voltage output at pin 3, the emitter of U10. The bias of U10 is adjusted by R34.

Log Amp

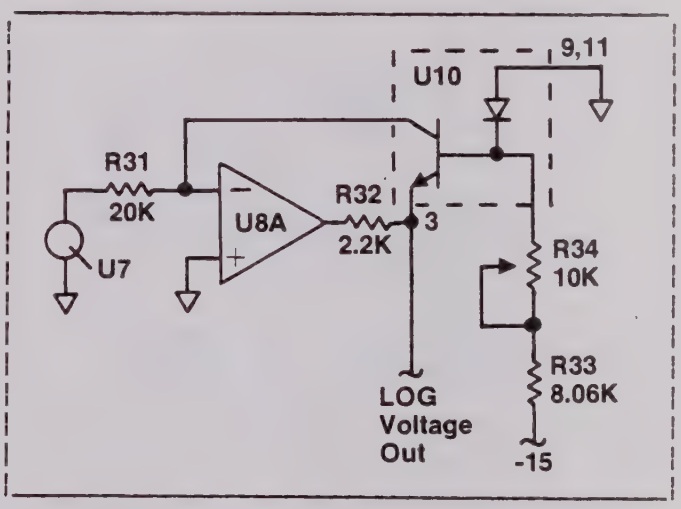

3.8.16.2
Current through the second half of U10 is controlled by the log voltage at U10-3. As you can see, the log voltage into U10 must always be negative for normal operation. Current from U10-8's collector is the square root of the input. This value is applied to the inverting input of U8B. U8's output powers the 400 ohm input resistor of U6 and is sent to output amp U9.

Anti-Log Amp

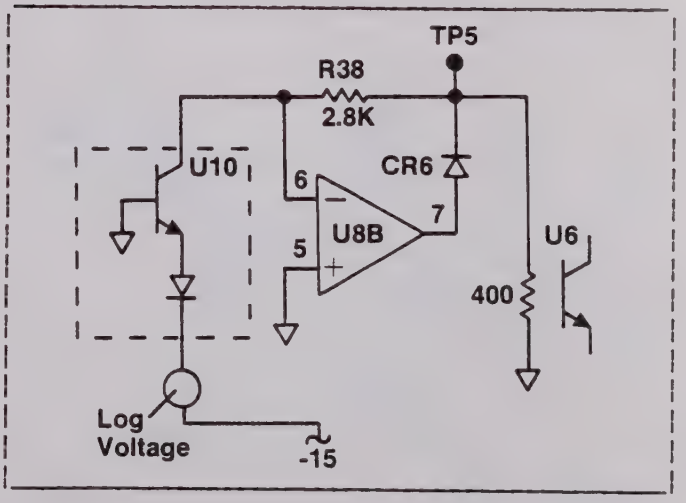

3.8.17
The thermal converter's output voltage is buffered by U9 and gated onto RT1 by Q22. R35 adjusts the gain of the output stage close to unity. Transistors Q39 and Q38 shift the voltage level of the 'output' command to pull the gate of Q38 down to -30 volts when it's turned off. When the output is enabled, Q38's gate is pulled up to the value of U9's output through R64.

Output Amp and FET Switch

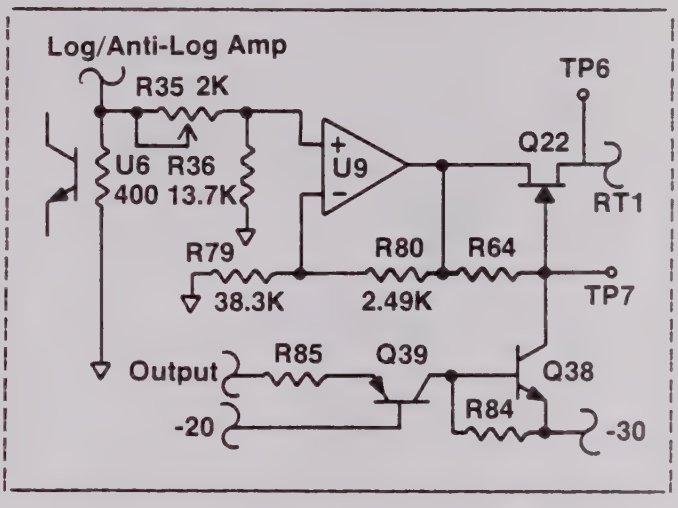

3.8.18
The 8506's reference common is isolated from large currents drawn by the TTRMS by the ground equalizer. Q32 and Q33 boost the current capabilities of U13 eliminating errors generated by IR drops in circuit land traces. The zero reference is adjusted by R50. CR10 and CR11 prevent large differences in potential between TTRMS common and reference common.

Ground Equalizer Circuit

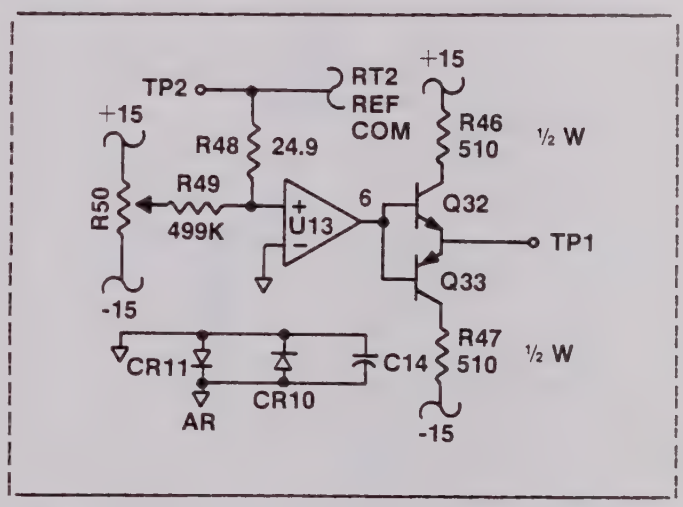

3.8.19.1
The sample and hold circuitry stores outputs from the thermal sensor, and associated amplifier offsets on C34. This is done by multiplying the signal from U9-6 times five, then applying this voltage across C34. R69 damps any ripples caused by switching Q20 on and off. R42 and R43 set the circuit gain to five.

Sample and Hold: Sampling

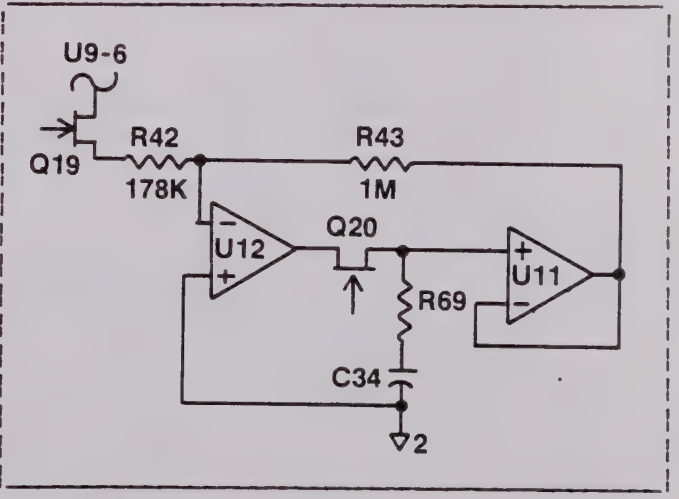

3.8.19.2
The sampled voltage stored across C34 is divided by five then applied to the 400 ohm input resistor of U6 when Q18 and Q31 are turned on. Q23 provides the added current boost required by U6. The sampled voltage is always positive, so Q23 is always biased properly when it's enabled.

Sample and Hold: Reading

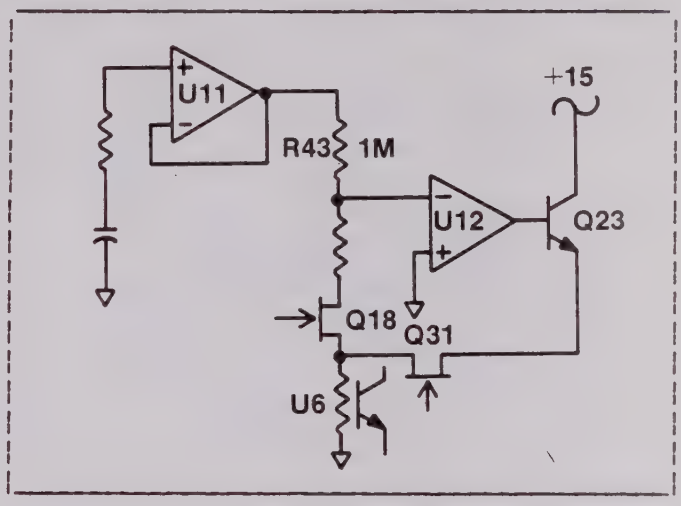

3.8.20
The FET switches are driven by open collector inverters of U4 and U15, and pulled up by 100K resistors in U16. The diagram to the right shows the typical values for each inverter.

Switch Drivers

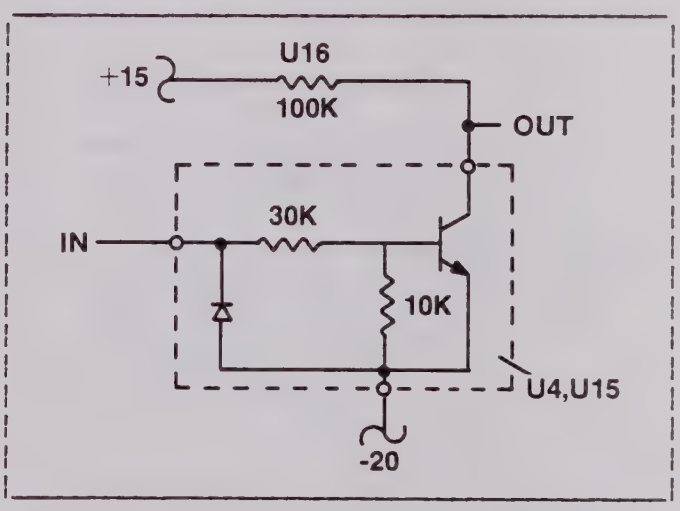

3.8.21
Q34 and Q36 gate the feedback voltage from the gain amp's output to R74 and U3. The output of buffer U3 drives the shield on the coax cable connected to P2.

Guard Driver

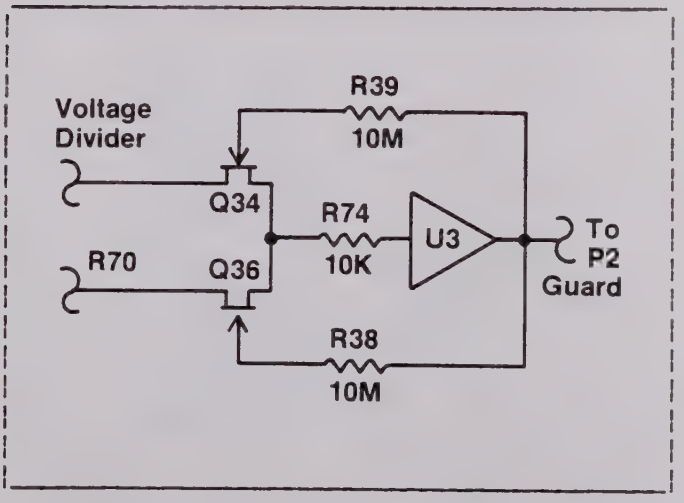

3.9.1
Inputs to the AC/DC converter come from either the front/rear terminals or from the current module via RT1, (HI) and RT3, (LO). K1 connects input cap C1 to the front/rear terminals through protection resistor R49. K2 enables RT1 and RT3 to the input. U1, the input amp, receives ac signals through C1 and R2 shunted by R3, R55, and C3, used for high frequency adjust. CR3 and CR4 protect U1 by limiting the input to +/-0.7 volts.

Analog Inputs from Hi Q Bus

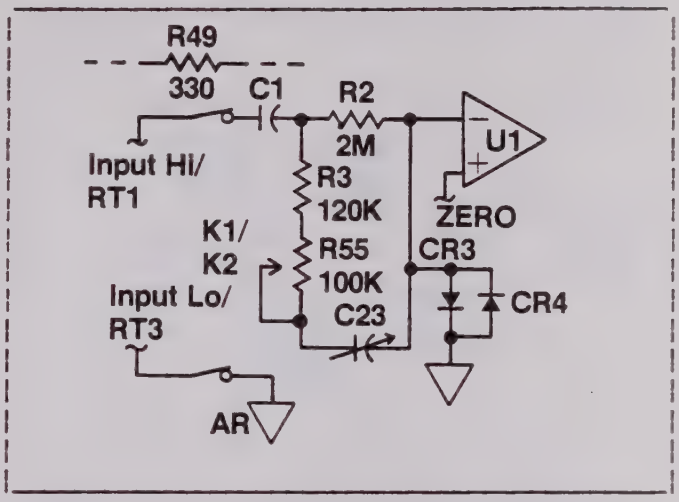

3.9.2
R51 and R52 are selected at the factory to provide temperature compensation for zeroing U1. Further adjustments can be made by tweeking R17.

Zeroing the Input Amp

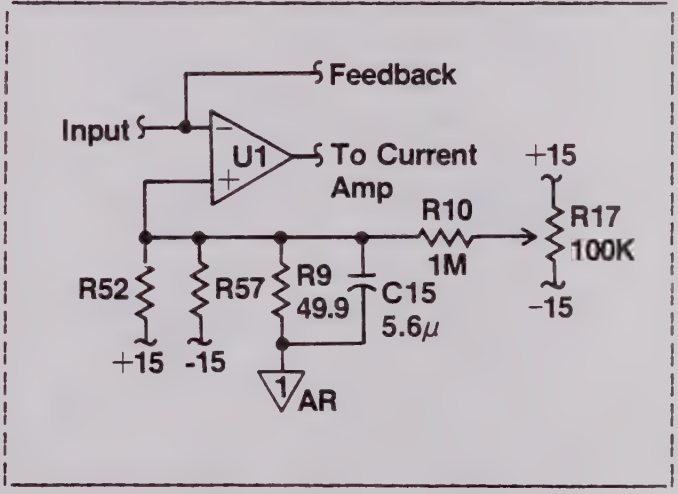

3.9.3.1
U1's output is coupled into a current amp, Q4 and Q6. The high impedance collector outputs from Q4 and Q6 drive the rectifying diodes. R11, CR9, R14, R15, R8 and R16 bias the current amp into a linear range. R50 provides a minimum load at zero crossover voltages when the rectifier diodes are turned off. CR8 protects the base-emitter junction of Q4 against excessive reverse biasing.

Current Amp

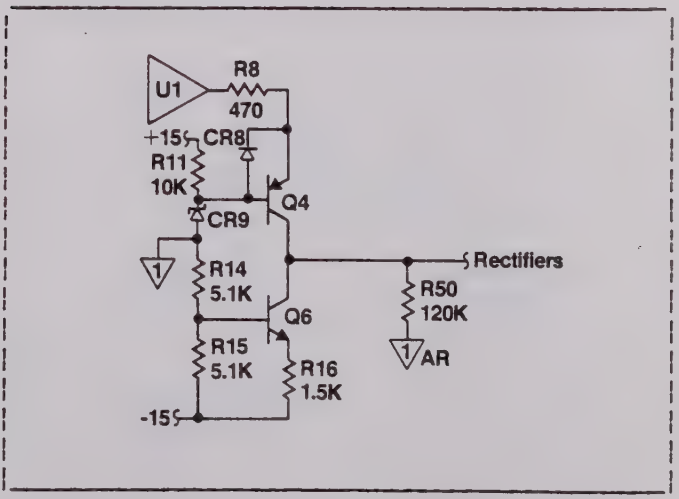

3.9.3.2
Q5 and C16 form an adjustable, buffered high frequency feedback path for the input/ranging amp. This path bypasses the rectifiers.

High frequency adjust

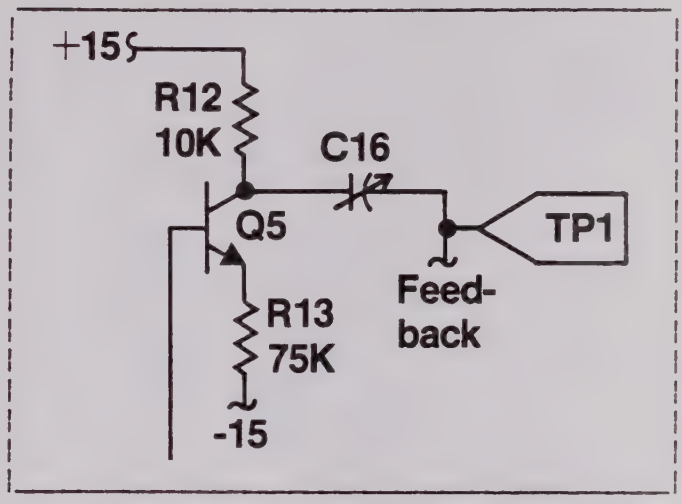

3.9.4
When the input voltage at the terminals is negative, U1 and the current amp go positive, turning CR11 on. The voltage at the top of R37 is stored in the filter section, then applied to the non-inverting side of the diff amp. The rectifying circuit ensures that the top of R37 is always positive for any polarity input.

Negative Half Cycle

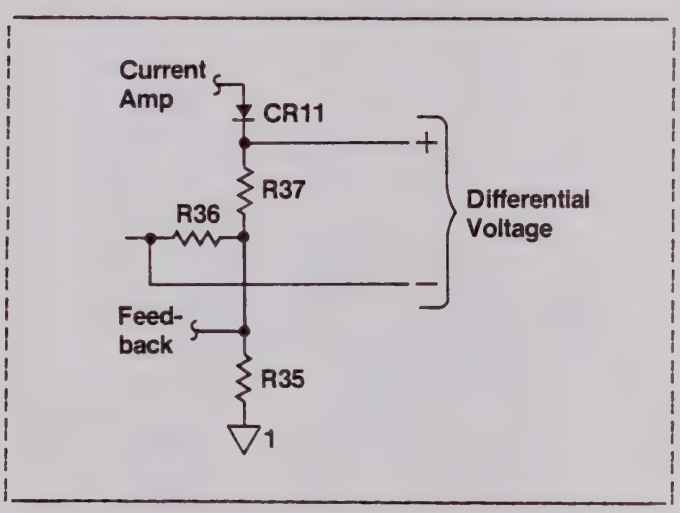

3.9.5
When the input voltage at the terminals is positive, U1 and the current amp go negative, turning CR10 on. The voltage at the bottom of R36 is stored in the filter section, then sent to the diff amp's inverting side. The rectifying circuit ensures that the bottom of R36 is always negative for any polarity input. Differential voltages between the top of R37 and the bottom of R36 are inputs to the diff amp.

Positive Half Cycle

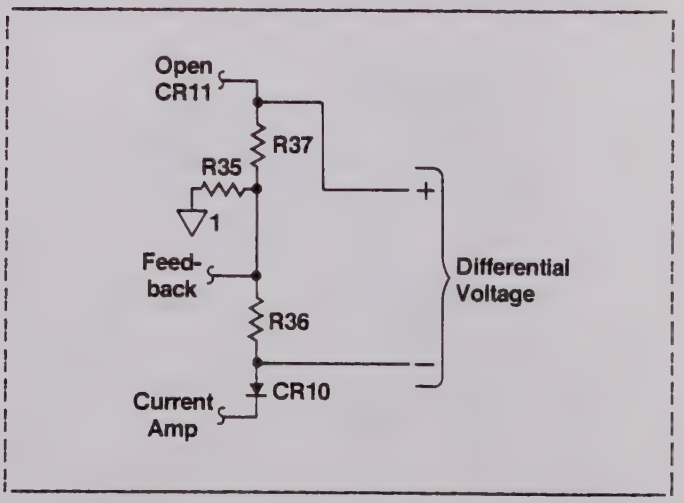

3.9.6
The AC/DC converter's four ranges are controlled by three switchable feedback paths in parallel with R18 ad R19. K3 is enabled for the 10V range, K4 for 100V, and K5 for the 1000V range. The 1000V range has an additional high frequency feedback path through C13, Q7, and Q8.

Feedback Paths

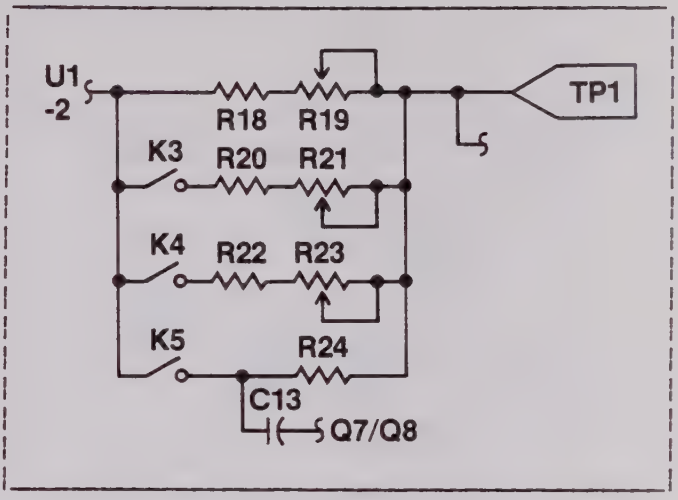

3.9.7
Q8 and Q7 are biased in their linear range to form a high impedance buffer for C13. This signal is sent to K5, the 1000V range relay contact.

Buffered High Frequency Feedback

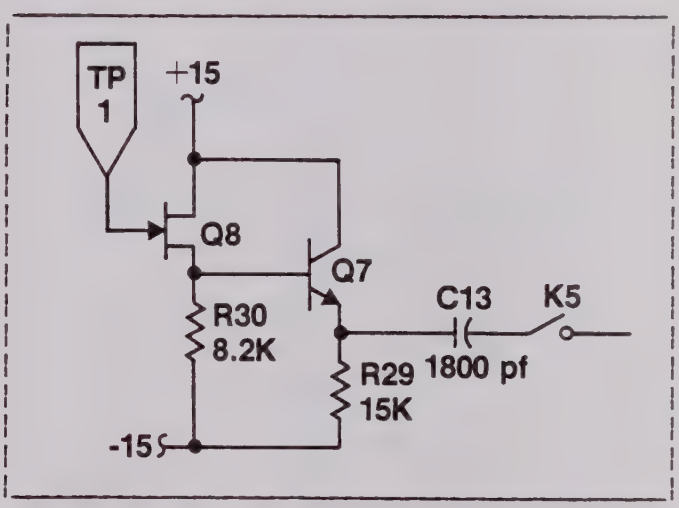

3.9.8
Outputs from the rectifiers are filtered by R39, C18, R40, R38, C19, and R41. These components form two low pass 'T' filters that store the positive and negative voltages from the rectified ac input. The outputs from the filters are routed to U6, a differential amp with a gain of 8 times 1.11, the average to rms scaling factor. Single ended outputs from U6 are always positive, (0 to 20 volts). CR12 biases U6 to -5, for a input supply voltage of +30 and -5 volts.

Diff Amp

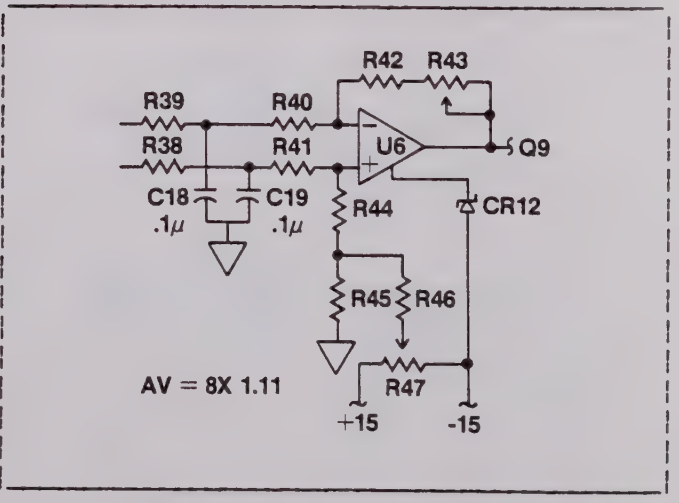

3.9.9
When Q12 and Q13 are turned on by Q14, additional capacitors C17 and C20 are gated to the filter circuit. ID2, (latched by U2) turns Q14 and the filters on and off.

Filter Enable

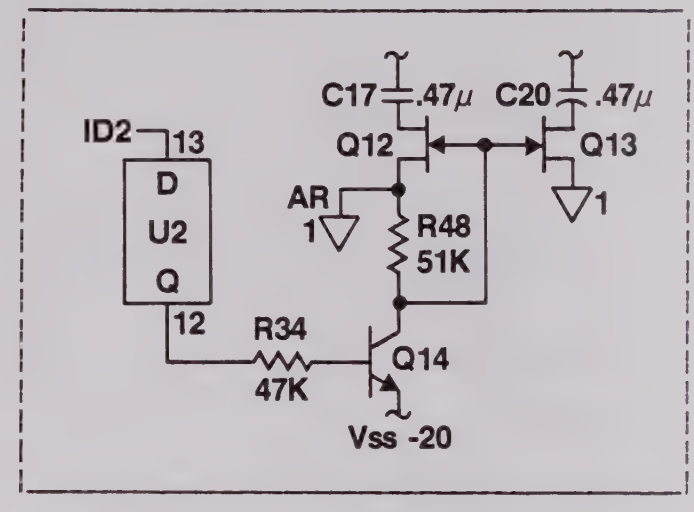

3.9.10
Outputs from U6 are gated to RT6 when Q9 is turned on. When U3's outputs, (from ID0 and ID1) are latched high, Q9 is turned off by saturating Q11 and Q10, holding Q9's gate to -30 volts.

Analog output enable

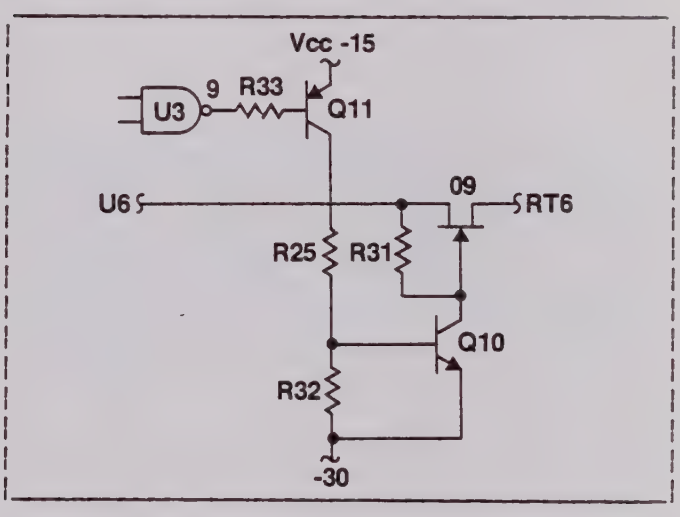

3.9.11
VA1 and VA2 are filtered on the AC/DC converter module by R53, C31, R54, and C32.

Power Supply Filter

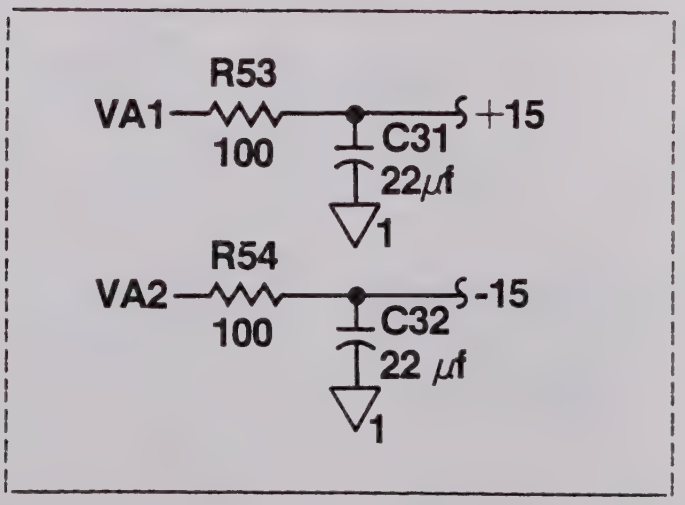

3.9.12
The AC/DC module is addressed when the controller sets IC1, IC2, and IC4 high. U3 decodes this condition and turns Q3 on, pulling the ACK line high through R27. Data on ID0 through ID5 is clocked into U2 when the controller retracts the module's address causing U3-6 to go high.

Digital Section: Address and ACK

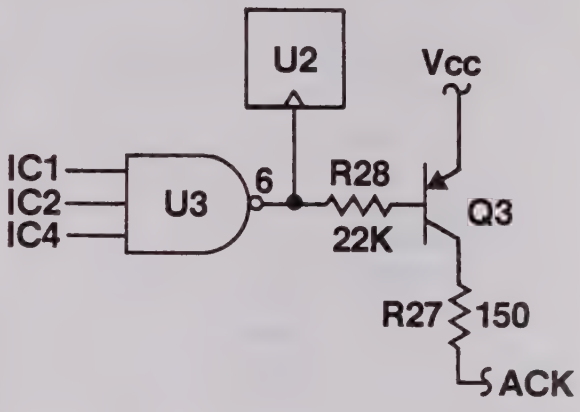

3.9.13
This truth table shows the relationship between the four ranges and three relays as selected by data lines ID3, ID4, and ID5.

Range Truth Table

Range	ID3	ID4	ID5	K3	K4	K5
1	1	1	1	OFF	OFF	OFF
10	0	1	1	ON		
100	1	0	1		ON	
1000	1	1	0			ON

3.9.14
This truth table shows how ID0 and ID1 enable either K1 on, K2 on, or both off. U2 latches the data on ID0 and ID1 when ACK, (U3-6) goes high. U3 and U4 insure that only one relay can be enabled at a time, even if erroneous data is written into U2.

K1 and K2 Logic

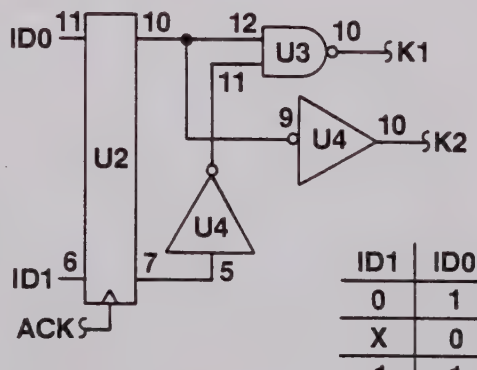

ID1	ID0	RELAY
0	1	K1
X	0	K2
1	1	OFF

3.9.15
The open collector drivers of U5 are paralleled to sink enough current to the relay coils of both K1 and K2. CR1/CR2 are kick back diodes.

K1 and K2 Relay Drive

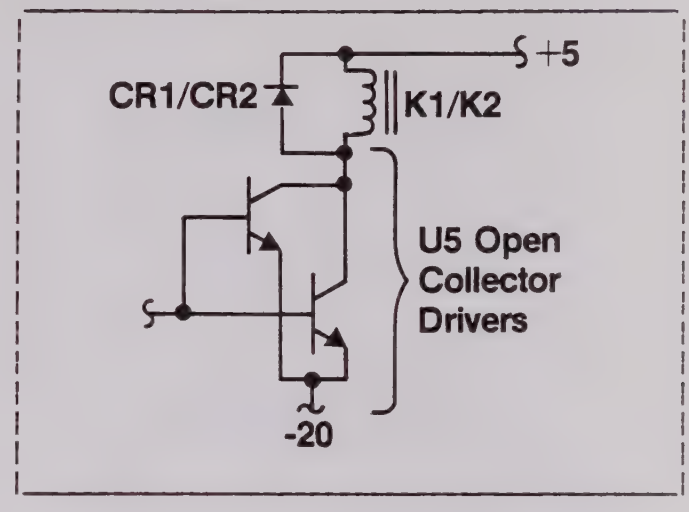

3.9.16
Relays K3, K4, and K5 are enabled by the latched values of ID3, ID4, and ID5 to select range feedback paths. U4 and Q2/U5 provide the current drive to the relay coils. Each relay coil has its own kick back diode and a 5.6uF cap that delays the relay's turn off time.

Feedback Path Selection

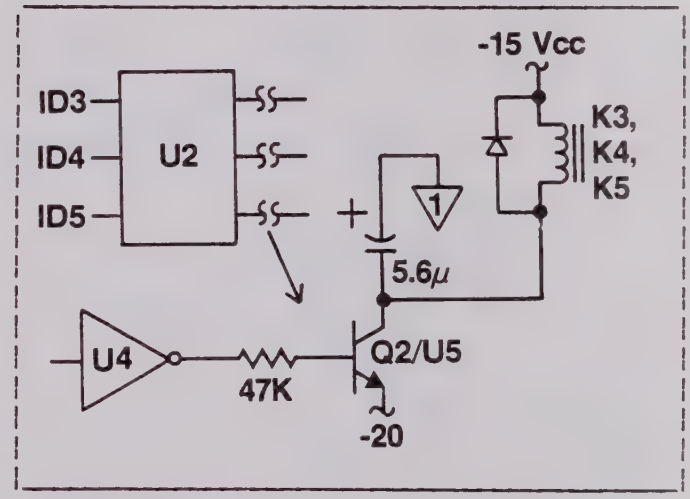

3.10.0
The -02 ohms converter for the 8500/8502 is almost identical to the -02A for the 8505/8506 instruments. One difference is a lower reference voltage used for the precision resistors. It's been changed from 2.3V to 1.86V by decreasing R30 from 11.3K to 8.87K. Since the circuit change is small, our detailed discussion will reference only the -02 converter.

-02 versus -02A

8502 = -02

8505 = -02A

8506 = -02A

3.10.1
U4 and Q8 form a buffer/amplifier with a high current output. When Q5 is commanded off, R16 and R31 set the gain of U4/Q8 to produce 18.74V at TP2. With Q5 on, R16 combines with R31 and R30 in parallel to produce 2.3V. These voltages are applied to the precision resistors for creating current sources for Rx. U4's positive supply is +30V, while the negative supply is -5V. CR9 subtracts 10V from the -15V supply for biasing U4. This keeps U4 in its most linear region for producing 18.74V and 2.3V.

-7 Volt Reference

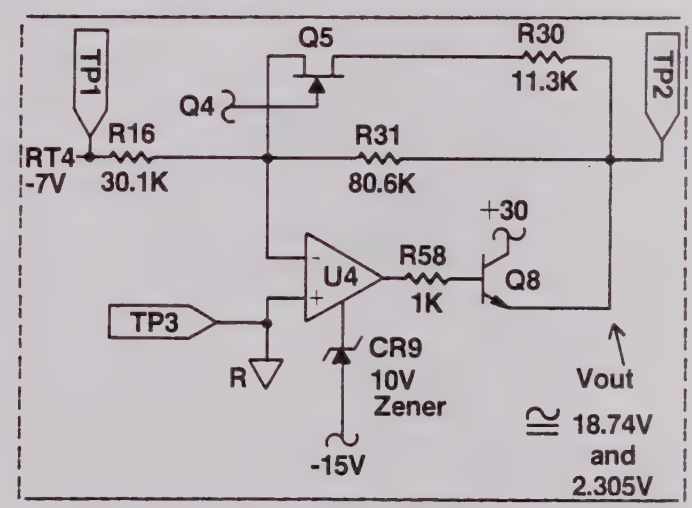

3.10.2
This chart shows the relationship between reference voltages, the active FETs, and relays used for all the ranges.

Voltage Reference Chart

Range	Volts	FETS	Relay
10	18.5	Q26 Q31	K1 K3
100	18.5	Q26 Q31	K1 K3
1K	2.3	Q26, Q5 Q31	K1 K3
10K	18.5	Q26, Q20, Q33	K1 K2
100K	2.3	Q5, Q26,Q20,Q33	K1 K2
1M	18.5	Q20	K1
10M	2.3	Q5, Q20	K1
100M	2.3 ÷8	Q5, Q36,Q19	K1

3.10.3
Q9 forms a high impedance, low offset input stage for the current source amp. Monolithic op-amp U5 is the gain stage. R20, R23, R21, and R26 are Factory Selected Values that compensate for offsets caused by thermal drift. If these parts are changed the ohms module must be returned to the factory to be 'TCed'.

Current amp: preamp and gain

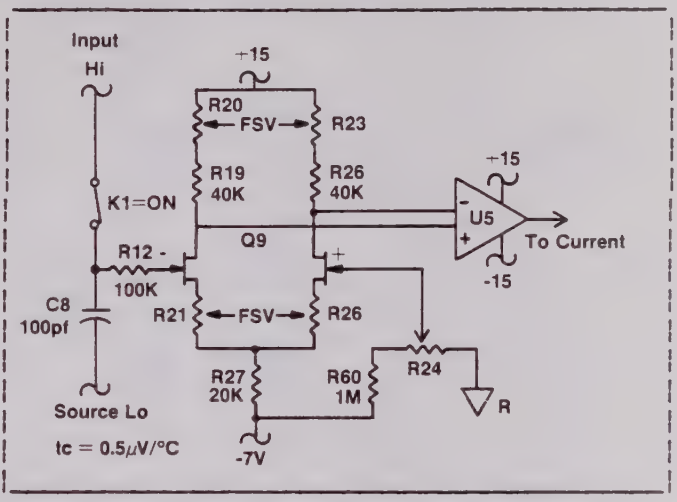

3.10.4
U5 pin 1 drives the current source output through Q37, CR18, CR13, and CR4. CR11 is biased on during normal operation. R49 and R48 keep Q37 turned on even when the source terminals are open.

Current drive amp

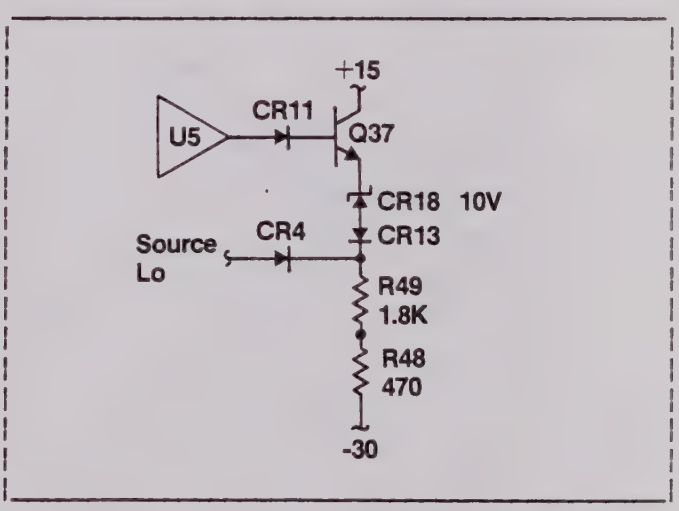

3.10.5
Once each ohms sample, V1 is measured on the RT1 analog bus line. V1 is the reference voltage from TP2. Q29 is turned on when the controller latched a zero into U2. This turns Q24 and Q28 off, allowing R53 the to pull the gate of Q29 up to the voltage at TP2. Q29 is turned off when Q24 and Q28 pull Q29's gate down to -30V.

Measuring V1

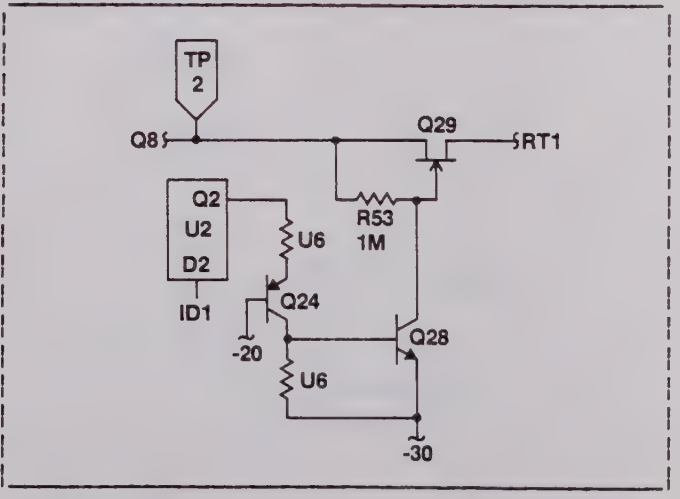

3.10.6
When the ohms converter is in the lower five ranges, (10 to 100K) V2 is measured each sample. V2 is the voltage at source HI, routed through K2 and Q33 in the 10K and 100K ranges, and through K3 and Q31 in the 10, 100, and 1K ranges. When measuring V2 in the 10K and 100K ranges, Q33 is turned on by switching Q12 and Q32 off.

Measuring V2: 10K and 100K ranges

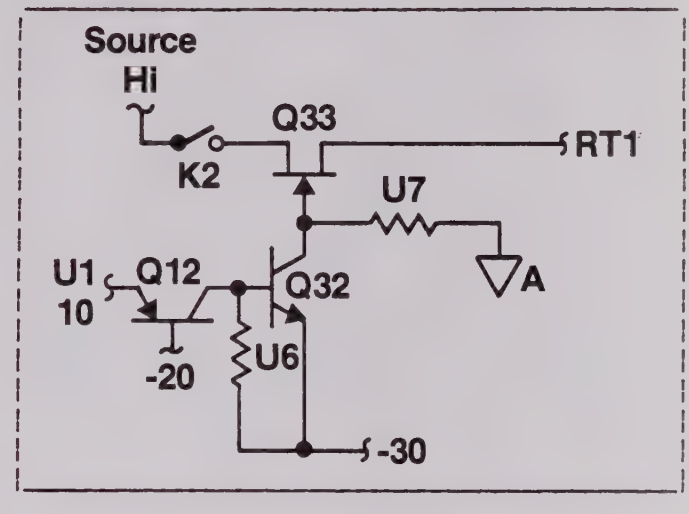

3.10.7
When the ohms converter is in the lower three ranges V2 is measured through K3 and Q31 by turning Q30 off.

Measuring V2: 10, 100, & 1K ranges

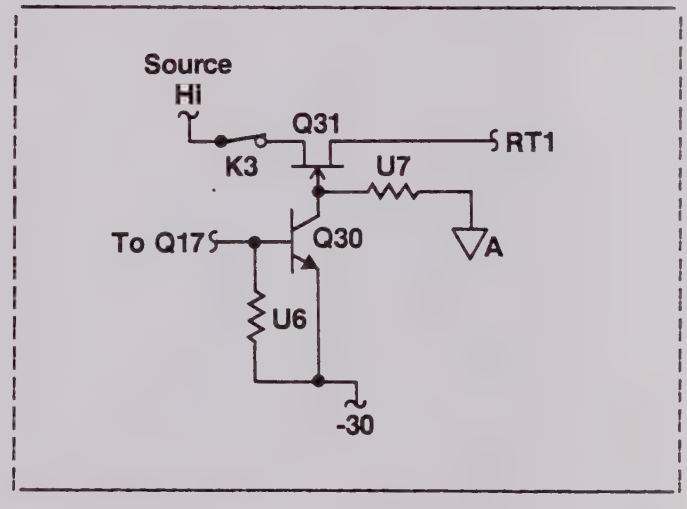

3.10.8
Vo is measured each ohms sample to determine the voltage at input LO. R9, R67, and Q39 protect Q35 and the RT1 analog line from over voltages. Q35 is turned on when Q34 and Q21 are turned off.

Measuring VO

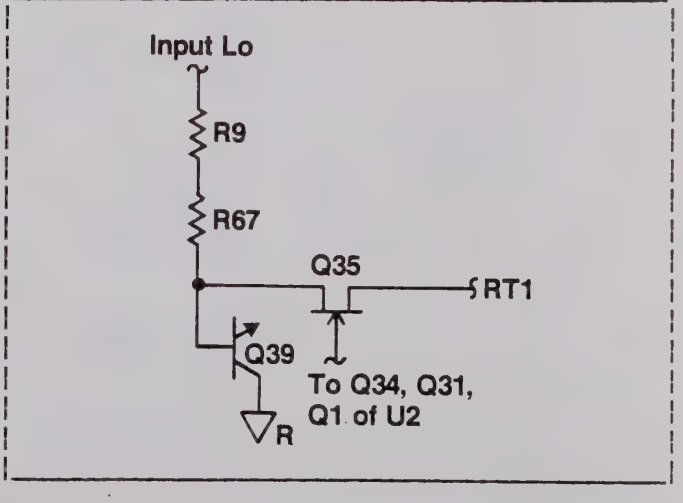

3.10.9
When in the 100M range R33, R35, R36, and R37 form a voltage divider for the reference supply. Q19 routes the divided voltage to precision resistors R40 and R41 when Q18 is turned off. Q36 is turned on in the 1K, 100K, 10M, and 100M ranges when Q4 and Q13 are off. U2's Q4~ output controls Q4.

Divide by Eight

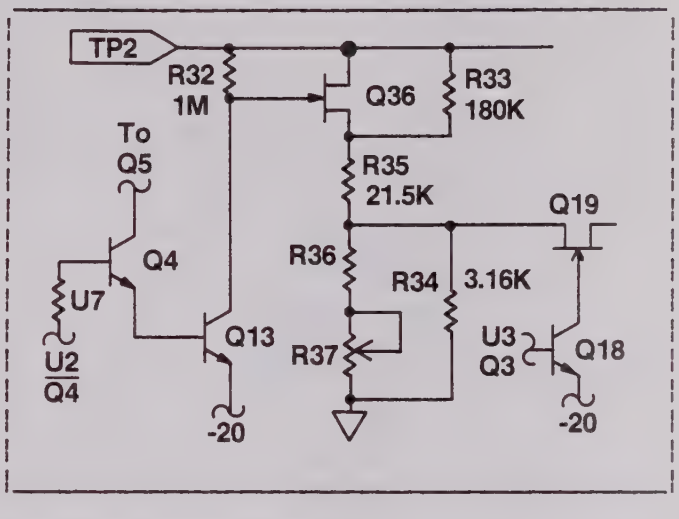

3.10.10.1
When the voltage between source HI and input LO exceeds 29V, Q16 pulls U5's inverting input below reference common, setting U5's output high. Since source high is clamped to 1.4V positive, the voltage at input low is forced to go negative. U5's output forces the 'overvoltage logic' to disable the input relays and abort the ACK signal.

Positive overvoltage

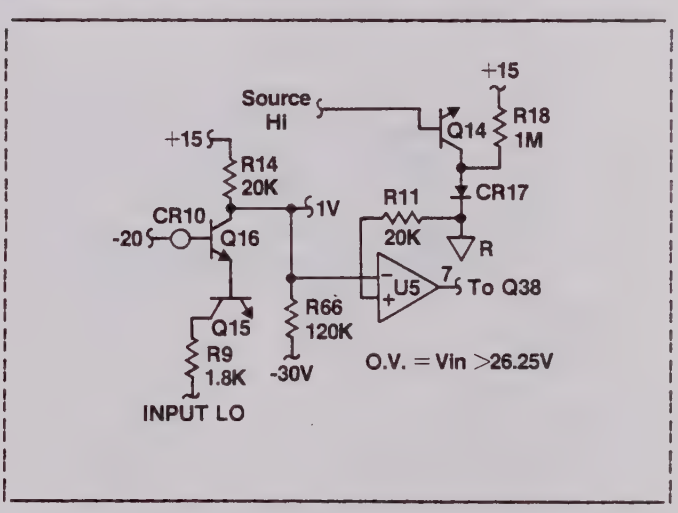

3.10.10.2
U5's inverting input is biased at 1V through pellet diode CR19. If the voltage between input LO and source HI rises above 3V, U5's output goes high, forcing the 'overvoltage logic' to disable the input relays and abort the ACK signal. Q11, CR8, and CR17 protect U5 by limiting its non-inverting input to 2.4V. Q10 limits source HI voltages to 0.7V above reference common.

Negative overvoltage

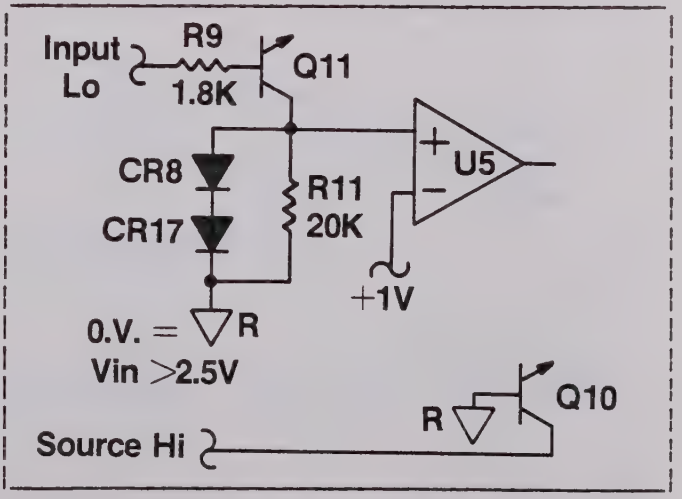

3.10.11
When K3 or K2 are on, (for the lower five ranges) Q26 is turned on to bias Q27 to about -4V. Q27 limits the right side of CR14, (also connected to the current source amp) to -4.7V.

Protection -3V Sense

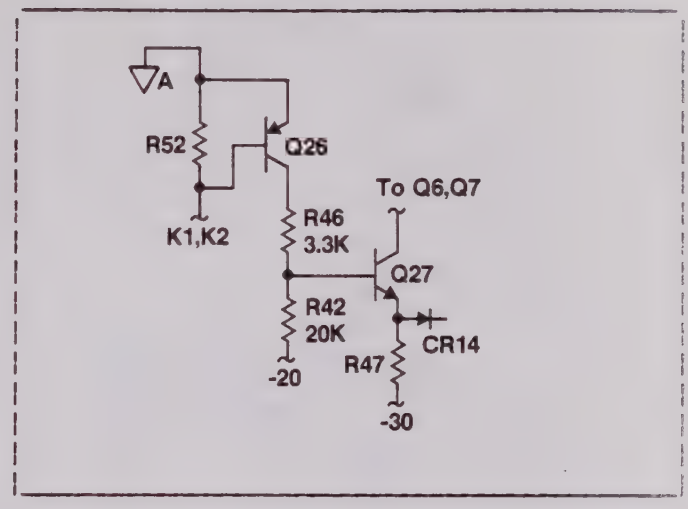

3.10.12
The controller addresses the ohms module by setting IC1, IC2, and IC3 high. When U1's output goes low, Q1 is turned on through R3 and CR12, pulling ACK high through R2. When the IC lines are retracted, the output from U1 goes high clocking ID0 - ID7 into U2/U3. U2/U3's latched data lines control FETs and relays on the ohms card.

Digital: Address and ACK

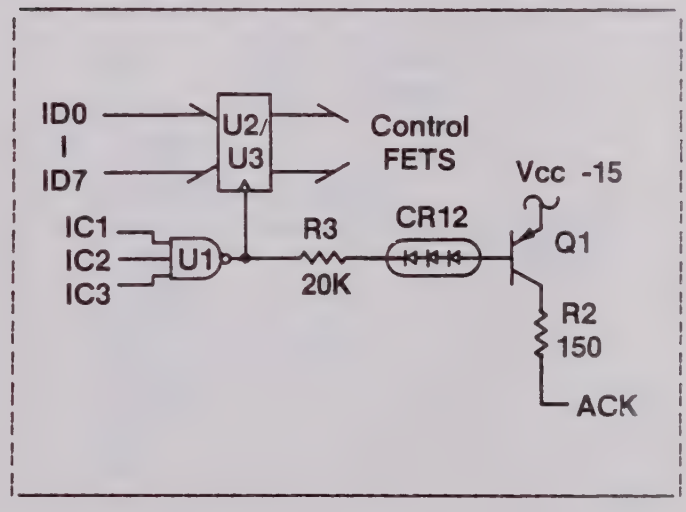

3.10.13
The combination of ID2, ID5, and ID7 turn on K2 and K3 for the lower five ohms ranges. U1 decodes U2/U3's outputs to enable K2 for the 10K and 100K ranges and K3 for the 10, 100, and 1K ranges.

Enabling V1/K2/K3

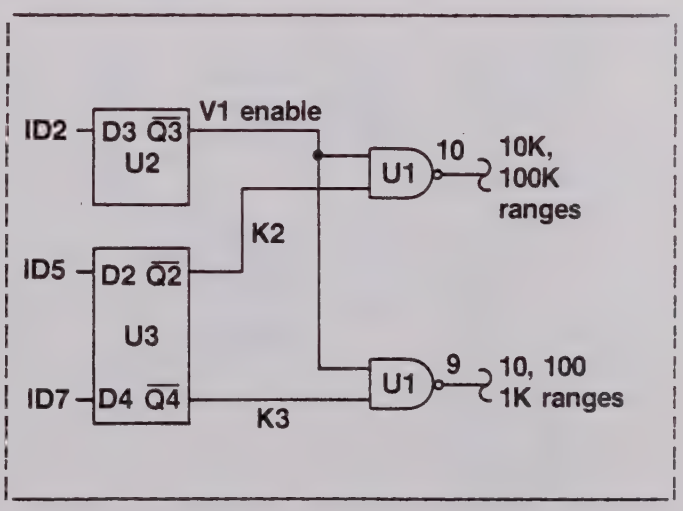

3.10.14
Q23 and Q25 turn on relays K2 and K3. When ID5 is latched high into U3-Q2~, Q23 is saturated and current flows through R50 and R52 turning K2 on. K3 is enabled in a similar way when ID7 is latched high.

Relay drive for K2 and K3

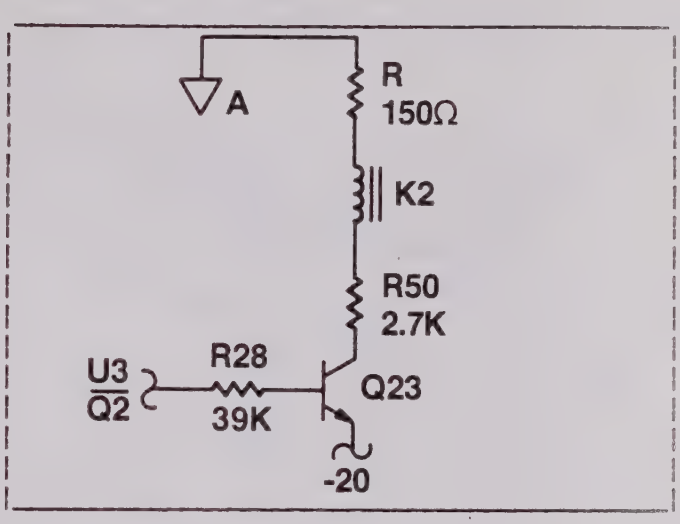

3.10.15
On initial power-up Q40 is held off for about 250mS through C21 and R68. Q40 turns on when C21 charges to -20V, (Vss) through R68 and R65. This enables the K1 'command input' to be passed to K1 drive transistors Q2 and Q3.

K1 drive and POR

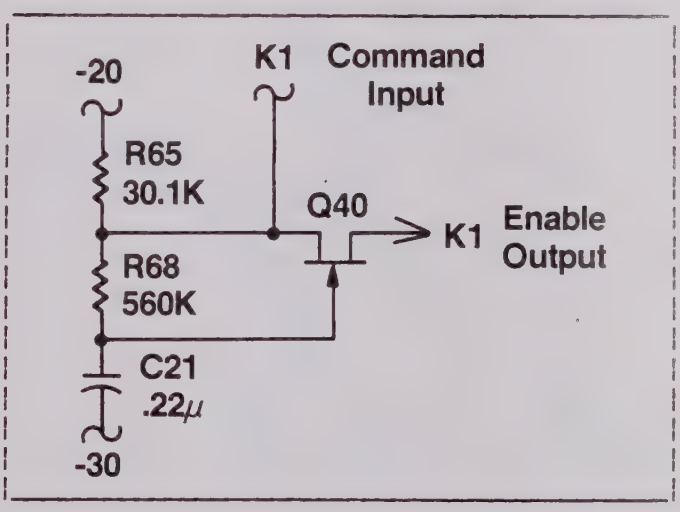

3.10.16
250mS after power-up Q40 is turned on and the latched value of ID3 controls K1 via Q2 and Q3. When the controller latches a zero into U3-Q1, Q2 and Q3 turn on enabling K1. CR3 prevents the inductive charge stored in K1's coil from going more than 0.7V positive when Q2 and Q3 turn off. C16 keeps Q2 turned off when U3-Q1 switches from low to high.

K1 Relay Enable

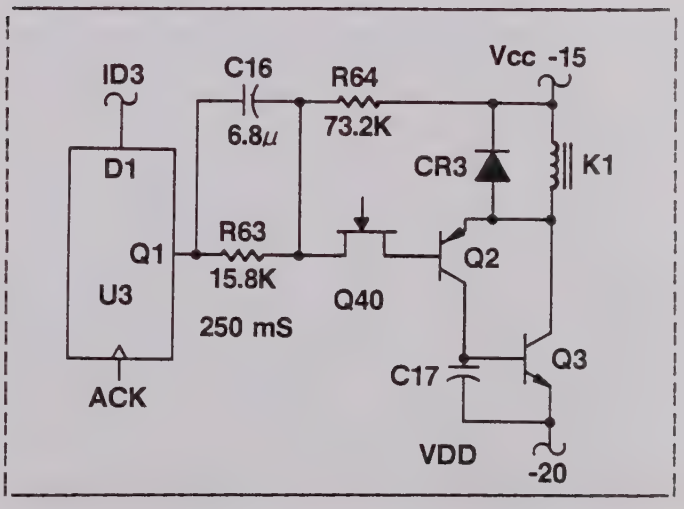

3.10.17
On either a positive or negative overvoltage U5's output swings positive and turns Q38 on through R10. With Q38 on, Q1 is held off through CR16 and the ACK signal is aborted. C18 holds Q1 off for a short time after U5's output returns low. The controller interprets an aborted ACK as a latching error.

Overvoltage ACK Abort

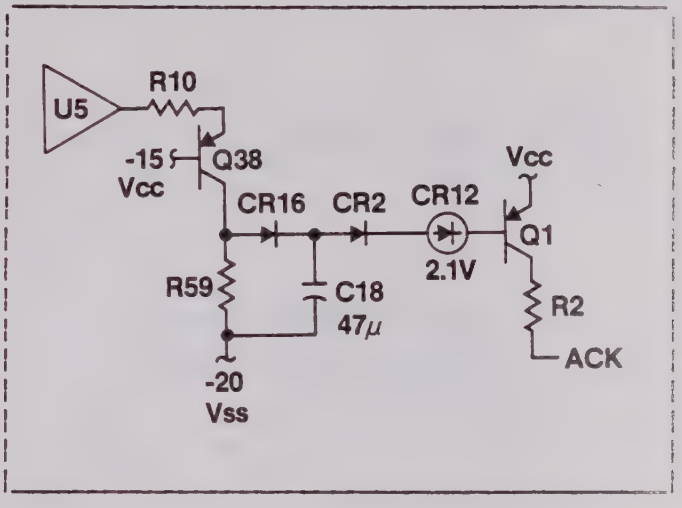

3.10.18
The overvoltage sense from Q38, (on) pulls the polarity input to U3 high, inverting the Q~ output and turning K1 off. This happens whenever U5 senses a negative or positive overvoltage condition.

Overvoltage and K1 turn off

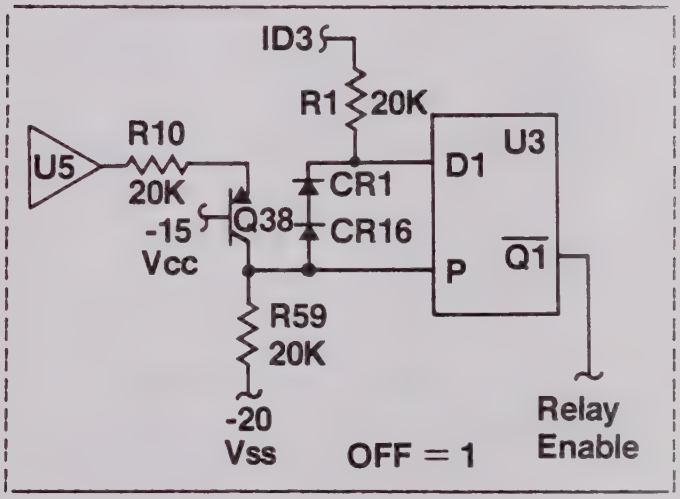

3.10.19
This truth table shows U2 and U3's Q outputs for all ranges. With the input open, all ranges are in overrange.

Truth table for overrange

Q1 0	Q2 1	Q3 2	Q4 3	Q1 4	Q2 5	Q3 6	Q4 7	OUT
0	⎍	⎍	1	0	1	1	0	10Ω
0	⎍	⎍	1	0	1	1	0	100
0	⎍	⎍	1	1	1	1	1	1K
0	⎍	⎍	1	0	0	1	0	10K
0	⎍	⎍	1	1	0	1	1	100K
0	⎍	1	1	0	1	1	0	1M
0	⎍	1	1	1	1	1	1	10M
0	⎍	1	1	1	1	0	1	100M
1	1	1	0	1	1	1	1	OFF

3.10.20
This truth table shows the Q and Q~ outputs from U2 and U3 with a 10K resistor across the input terminals. The instrument should be in autorange. (P and P~ stands for pulsing high and low)

Truth table (10K)

		U2					U3
Q1	Q2	$\overline{Q3}$	$\overline{Q4}$	$\overline{Q1}$	$\overline{Q2}$	$\overline{Q3}$	$\overline{Q4}$
P	$\bar{P}$	P	1	0	1	0	0

10K resistor across input, auto range.

3.10.21
The ohms converter uses all the guarded supply voltages. VA1 through VA4, (+30V, +15V, -15V, -30V) are low pass filtered on the card by 150 ohm resistors, (R4 - R7) and 6.8uF caps, (C1 - C4). The digital supply is filtered by C11. E1 is a 400 volt spark gap.

Power Supplies, Grounds, and Guard

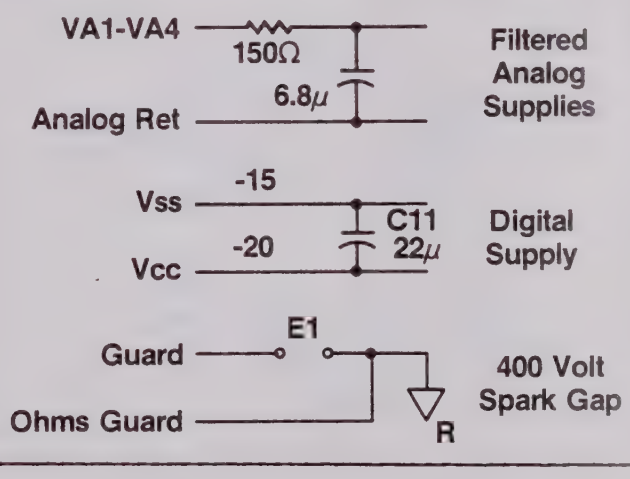

3.11.1
K3 and K4 enable source HI and LO from the front/rear terminals to the current shunt module for the lower three current ranges. Input currents are routed through R4 and converted to voltages by inverting amp 'A1', (Q19, U1, Q1, and Q2). A1's gain for the three lower ranges, (100uA, 1mA, and 10mA) is set by Rf, with the non-inverting input gated to either DC or ac common through R73 and R8. K3 switches the input current to analog return. The next three graphics show the feedback paths for each range. A1 is explained after discussing the five range configurations.

Low Current Ranges

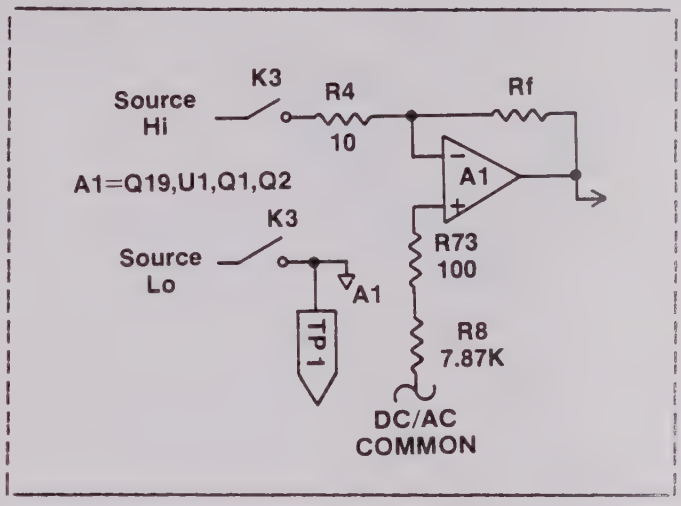

3.11.2
Gain for the 100uA range is set by R30 and R31. Q30 and Q31 are enabled for this range when Q22 is off.

100uA Range

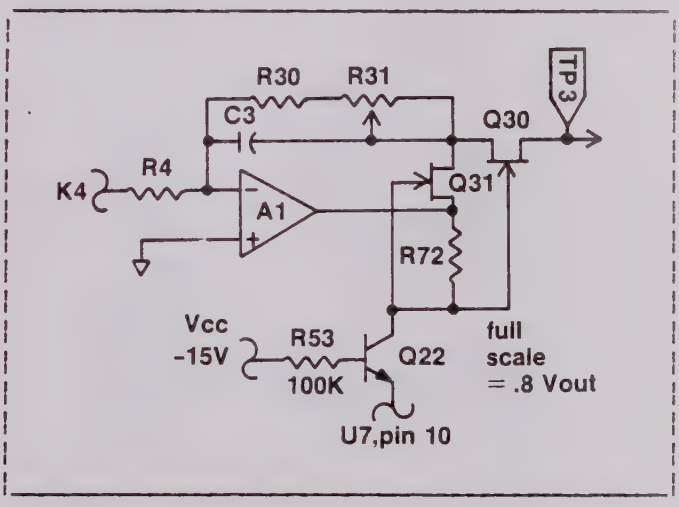

3.11.3
The controller selects the 1mA range by latching a zero into U2, pin 5. This turns Q13 off and enables Q7 and Q10. R32, R33, and R34 set the gain for the 1mA range.

1mA Range

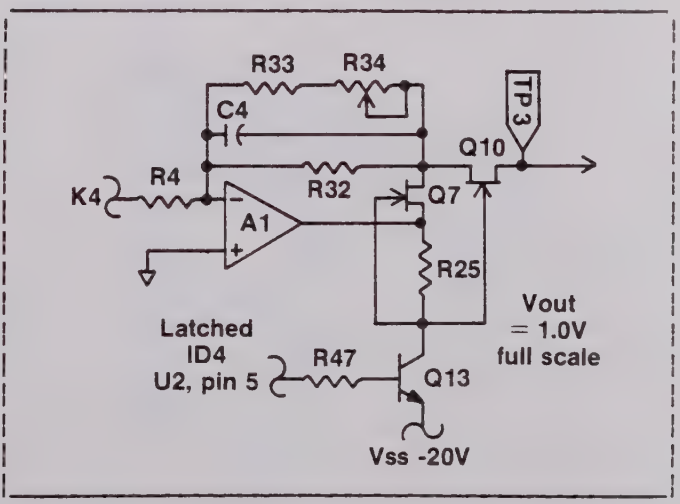

3.11.4
The controller selects the 10mA range latching a zero into U2, pin 2. When Q14 is turned off, Q8 and Q9 are enabled. R35, R36, and R37 sets the gain for the 10mA range.

10mA Range

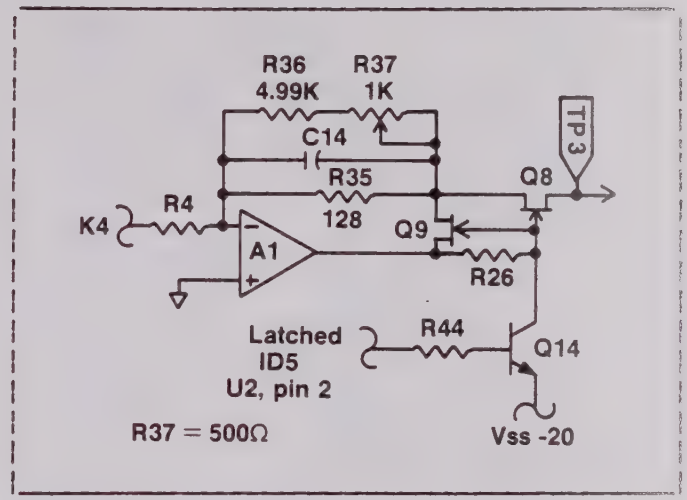

3.11.5
Input currents are shunted through low value precision resistors when in the 100mA and 1A ranges. In the 100mA range, K2 and K3 are enabled. K3 and K1 are enabled for the 1A range. Voltage across the shunt resistor(s) is then applied to A1, configured as a diff amp. A1's non-inverting side is the same for both ranges with Q21 turned off and Q20 on. The inverting side sets the gain for the two ranges by shunting R7 with Rin when Qin is enabled. Q26 is off for the two high current ranges, enabling Q29 and R66. This completes the inverting side's feedback path. When Q15 is off output voltages are gated through Q12.

High Current Ranges

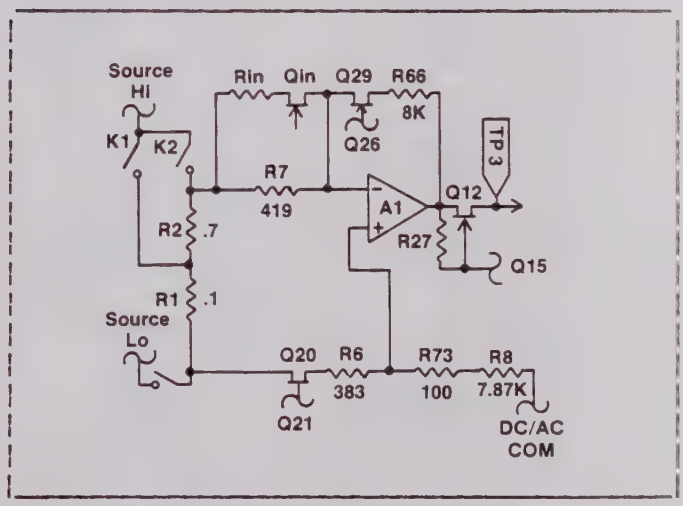

3.11.6
R1 and R2 form the current shunt through K2 when the 100mA range is selected. The gain for A1 is set by R70 and R71 with Q32 on.

100mA Range

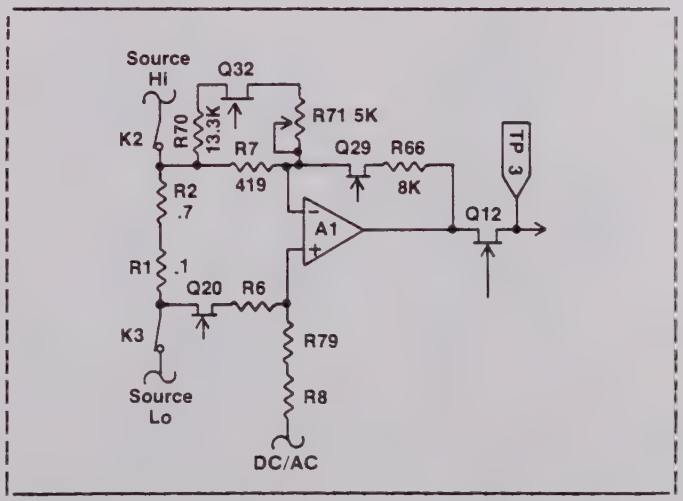

3.11.7
R1 forms the current shunt through K1 when the 1A range is selected. Gain for A1 is set by R68 and R69 with Q28 on.

1A Range

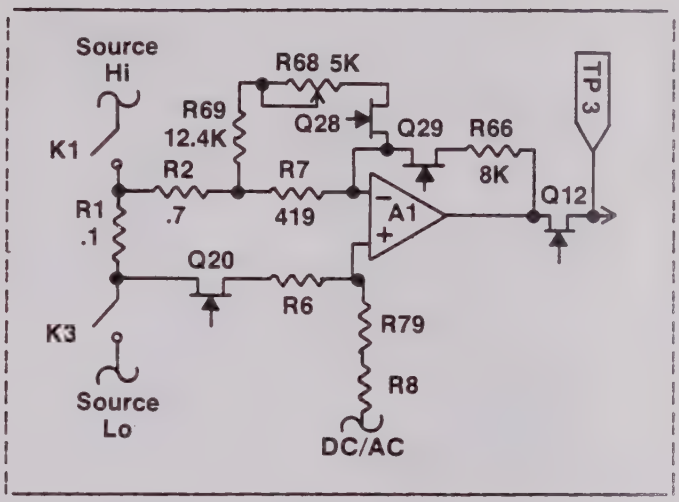

3.11.8
DC and AC current measurements are selected by ID0. When ID0 is latched low, Q5 turns off and R11 pulls Q3's gate to analog return, enabling Q3. This gates R8, (from the diff amp's non-inverting input) to reference common for DC current measurements. For AC measurements Q6 is off, enabling Q4. With Q4 on, R8 is now connected to RT3, input LO for the AC modules.

Switched DC/AC Commons

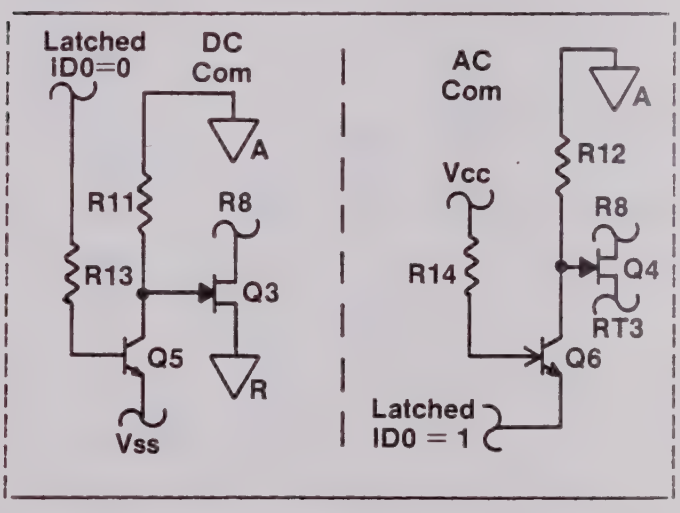

3.11.9
Dual fet Q19 offers a high impedance, low offset input for A1. R55 and R56 are selected at the factory to provide high temperature stability. Source biasing for Q19 is based on the stable -7V on the RT4 line, (from the A/D module). Op-amp U1, an LM318, is the gain stage for A1. C9 and C8 are loop gain compensation caps for A1.

A1: Input and Gain Amps

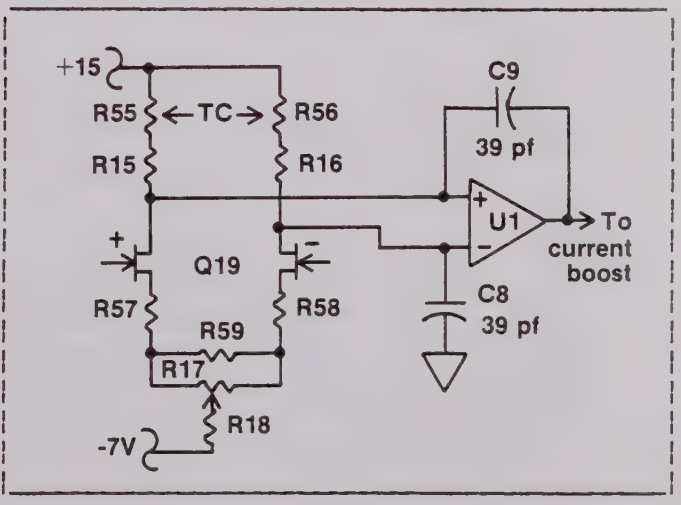

3.11.10
A current boost output for A1 is required to drive the lower three ranges. Resistors R20, R19, R21, and R22 bias Q1 and Q2 in a push-pull configuration. R23 and R24 limit the output current and stablize gain differences between the output transistors. C1 and C2 are by-pass caps for A1.

A1: Current Boost Output Drivers

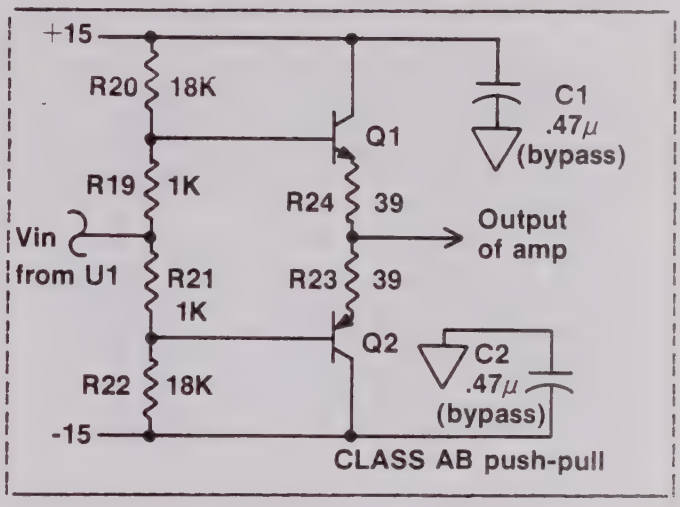

3.11.11
The current shunt's output voltage is routed to RT1 by turning Q11 on. When the controller card latches ID3 low, Q17 and Q16 turn off allowing Q11 to turn on. When ID3 is latched high, Q17 turns on and saturates Q17. This holds Q11's gate to -30 volts.

Analog Bus Output FET

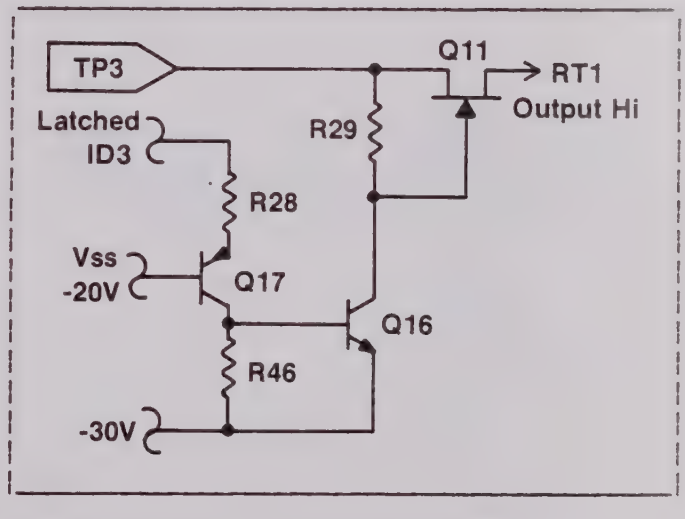

3.11.12
The controller card addresses the current shunt by placing IC0, IC1, and IC3 high. This drives U5-6 low pulling ACK high through Q8 and R38. When the controller retracts the IC lines U5-6 goes high and data on ID0 - ID5 is latched into U2. This latched data controls relay drives and FET switches.

Digital Section: Address and ACK

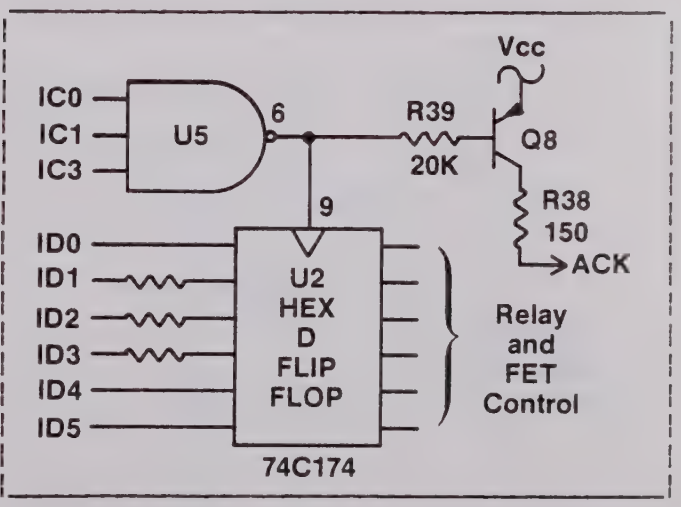

3.11.13
This truth table shows the relationship between latched data and the ranges. When the current module is not selected, (e.g., in volts mode) ones are latched into U2 to turn all functions off. When in the current mode, the controller refreshes data to the current module every 4mS, (two mark interrupts).

Ranging Truth Table

Range	ID0	ID1	ID2	ID3	ID4	ID5
Not Sel	1	1	1	1	1	1
100μ DC	0	1	1	0	1	1
1μ DC	0	1	1	0	0	1
10μ DC	0	1	1	0	1	0
100μ DC	0	1	0	0	1	1
1A DC	0	0	1	0	1	1
xAC	1	X	X	X	X	X

3.11.14
The circuitry that drives K1 is typical of how all the relay drives are enabled. U3 buffers and inverts the latched ID value that drive U4. U4's high current, open collector transistors drive the relay coils. Kick back diodes, (CR2 for the K1 circuit) protect U4's outputs by shunting the energy stored in the coils. Vcc, or supply voltage for the relay coils is provided by Q33.

Relay Drive

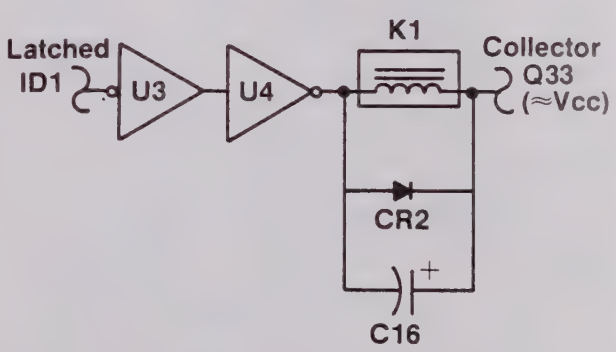

3.11.15
When the instrument is initially powered up, C11 charges up though R74. This charge-up time holds the supplies to all the relay coils off for a short time. When Q33 is fully saturated, the voltage at its collector is almost at Vcc, or -15 volts.

Q33: Relay Power on Hold-off

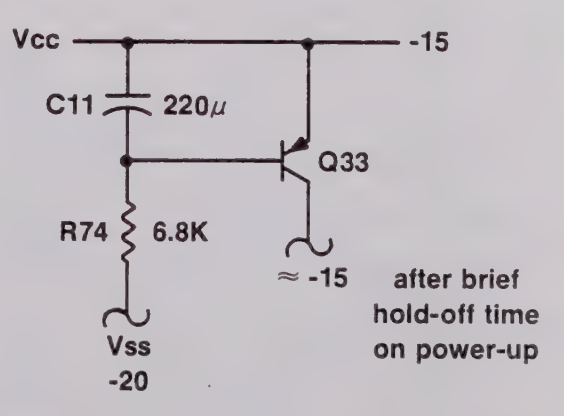

3.11.16
When the current shunt is selected, the controller checks for overvoltages at the source terminals. This flow chart represents what happens each time the 'Current Switch' on the front panel is pressed. K5 and K3 are held on for about 100mS while checking the ACK line. If an overvoltage is sensed, K5 and K3 are disabled and the ACK signal is aborted. The controller then enters an ERROR 4 condition. During an error 4 the controller suspends all foreground processes.

Overvoltage Protect Flow Chart

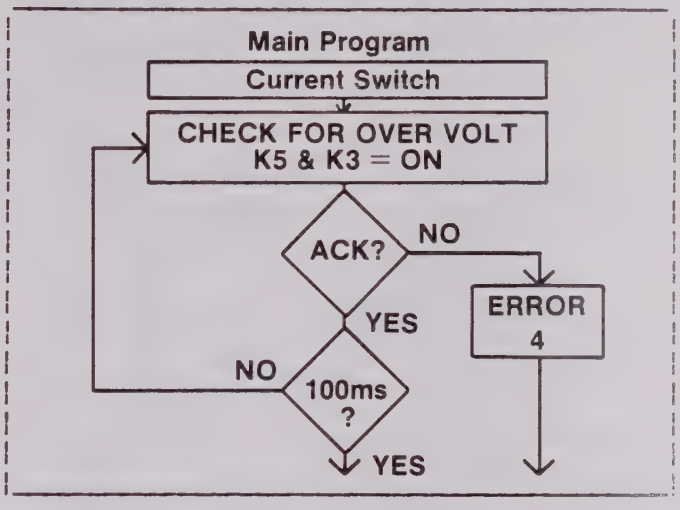

3.11.17
U6 senses the input voltage on the current source terminals when K3 and K5 are enabled. R48 and R54 divide the input voltage to a value compatible with U6 through CR11 for positive, and CR12 for negative inputs. R42, R40, and R41 set the upper and lower limits. If either limit is exceeded, the U6 goes to its positive rail, pulling TP2 up to about 8V through CR14 or CR15. Power supplies for U6 are -15V for the negative side and +10V for the positive. VA1, (+15V) and CR22 form the +10V for U6. C10 stores the 8V long enough for the controller to recognize the aborted ACK condition.

Overvoltage Sense

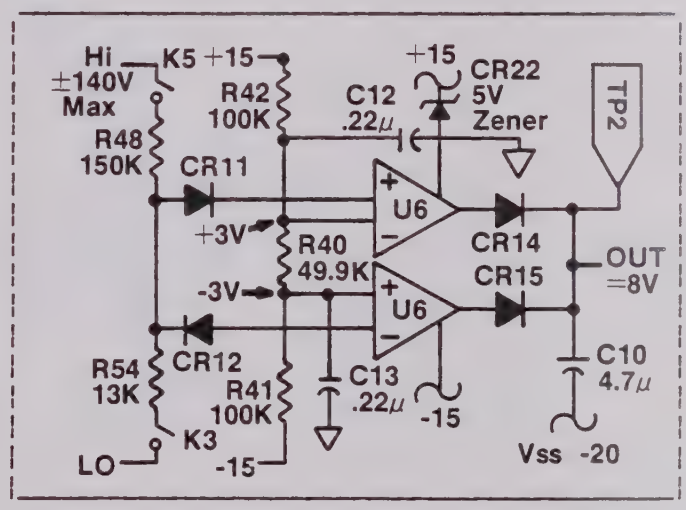

3.11.18
When U6 goes to its positive rail to signify an overvoltage, TP2 goes to about 8V. This voltage keeps Q8 turned off and ID1 - ID3 held high. With Q8 held off, the ACK signal is aborted and the controller enters its ERROR 4 condition. Holding ID1 - ID3 high latches 'ones' into U2 and turns the relays off. R50, R51, and R52 isolate CR17, CR18, and CR19 from the buffers that drive the ID lines.

ACK Signal Abort

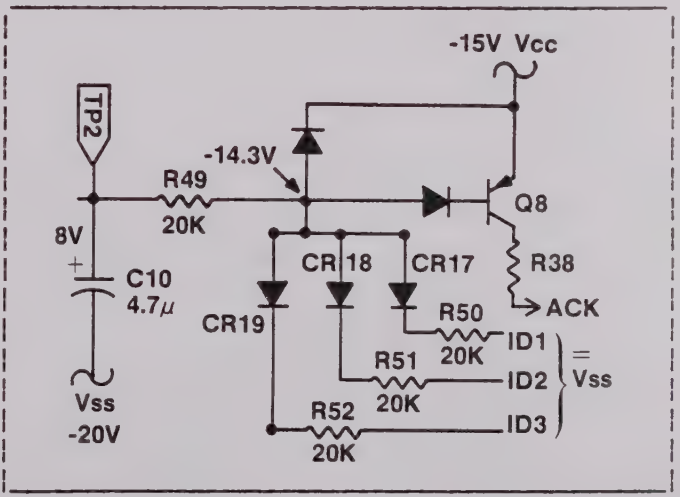

3.11.19
In addition to overvoltage protection are two forms of overcurrent protection. Current for the lower three ranges is limited by controlling the maximum voltage across the 10 ohm input resistor. CR7 and CR8 are biased on through R9 and R10. CR9 and CR10 stay off as long as the voltage at K4 remains below 1.4V. Since the inverting input to A1 is at virtual ground, input current is limited to +/-140mA for all three ranges. This is low enough to protect input resistor, R4.

Overcurrent Protection: 100mA range

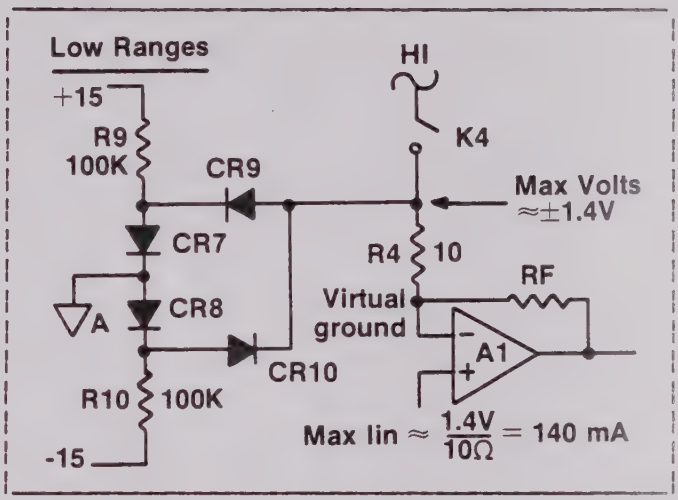

3.11.20
Shunt resistors R1 and R2 are protected from excessive currents by limiting the voltage across them via CR5 - CR8. CR7 and CR8 are biased on through R9 and R10. CR5 and CR6 stay off as long as the voltage across R1, or R1 in series with R2 remains below 1.4V. Sound familiar? When K1 closes for the 100mA range, current through R1 and R2 is limited to 1.85A. When K2 is closed the current through R1 can go as high as 14A, however this much current would take out the front panel fuse, (1.5A).

Overcurrent Protection: 1A range

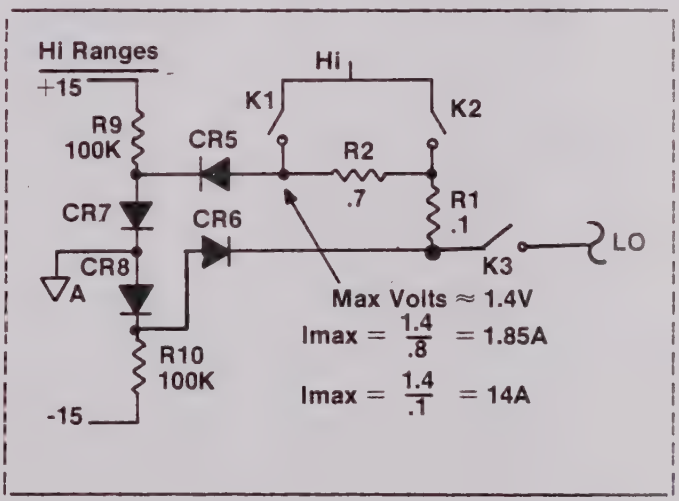

3.12.1
The cal memory module responds to four addresses from the controller: ADDR~, VA2~, VA1/Key~, and Spare Parts. When the controller addresses any of these four functions U17 turns Q1 on through R2. This pulls the ACK line to Vcc through R1. When the controller receives the ACK signal it retracts the address and Q1 turns off. The four functions are explained in detail in the following paragraphs.

Address Acknowledge

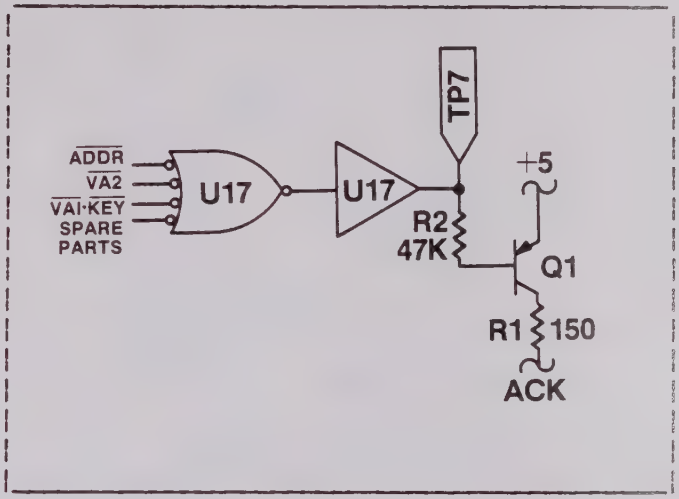

3.12.2
Memory locations are accessed by latching an eight bit RAM address into U23 and U22. The controller sets IC1, IC2, and IC6 high while data lines ID0 - ID7 hold the RAM address. When the controller retracts the IC lines, U14 goes high clocking the ID lines into U23 and U22. This is done on both reads and writes to cal memory.

Memory Address: ADDR~

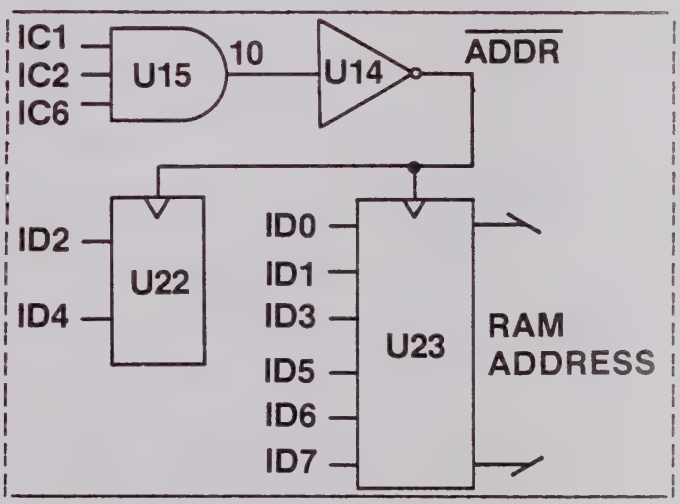

3.12.3
The controller reads RAM data across the ID lines by addressing VA2~. This function, (at address BA~) is decoded by U14, U15, and U13. The output from U13-10 drives chip enable, (U21/U9, pin 19) and the RAM's output disable through U2.

VA2~

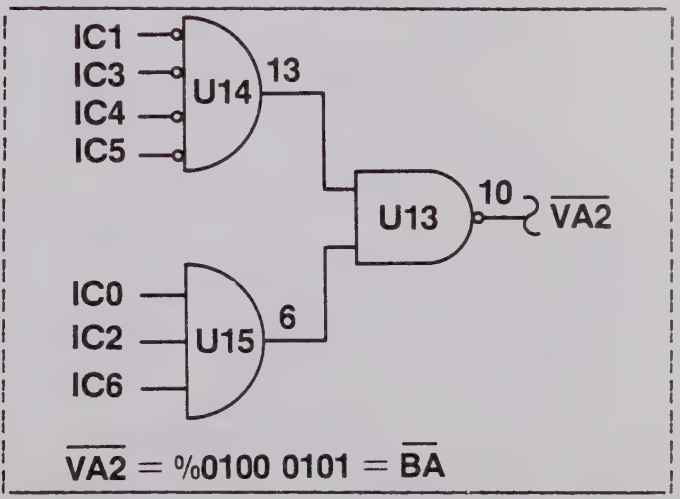

3.12.4
The controller writes data into the cal memory module by writing a special 'key' word using the VA1~ function. Control lines IC0 - IC6 are decoded by U14, U15, and U13 to produce the VA1~ signal. The address for VA1~ is C7~. When VA1~ is active, the controller places the 'key' word on the eight ID lines.

VA1~

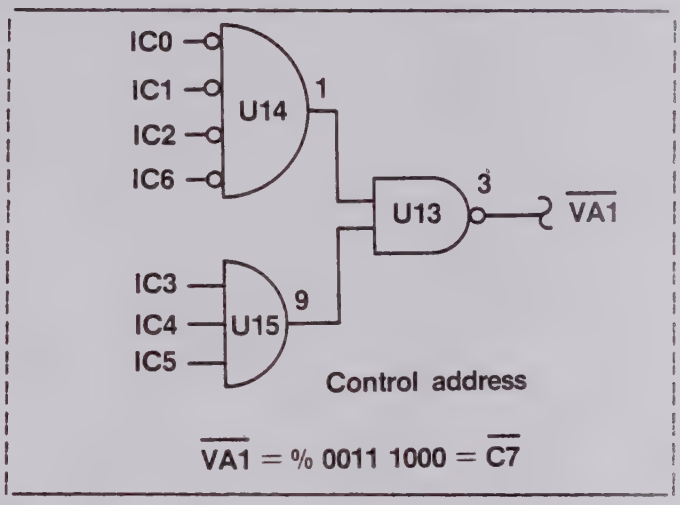

3.12.5
The KEY~ word on the ID lines is decoded by U24, U25, and U13. When the output of U13 goes low, KEY~ sets the control logic for a write into RAM.

Key~

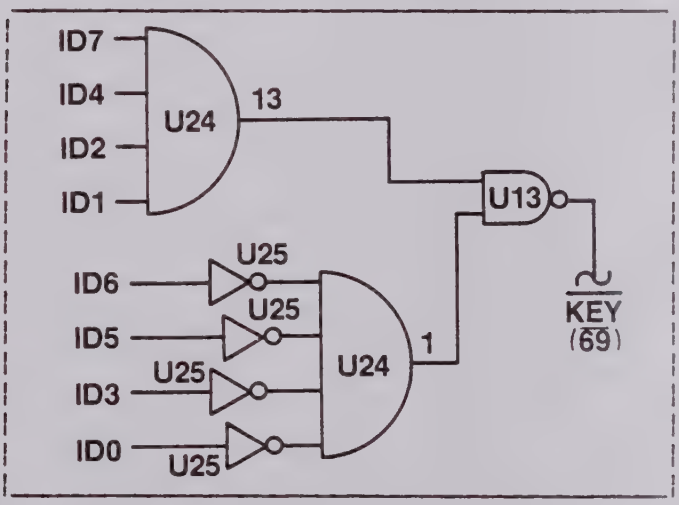

3.12.6
When VA1~ and KEY~ are presented to U2, U12-2's Q~ output goes low, enabling the R/W~ line to be gated through U2-4. The controller then writes data into cal memory's RAM.

Write mode Enable

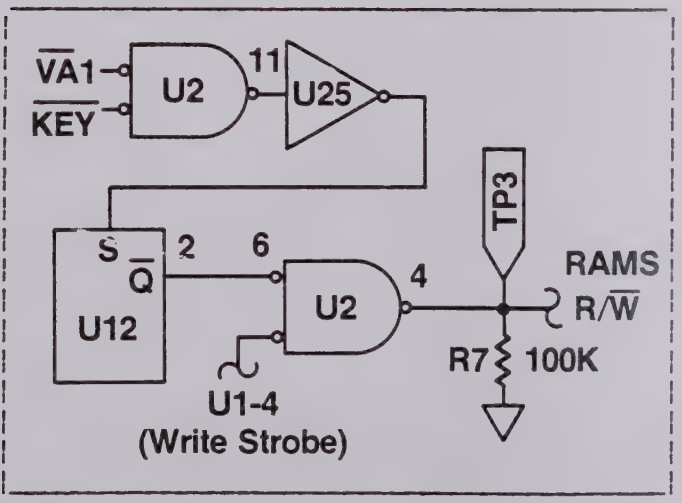

3.12.7
The controller completes the write sequence by addressing VA2~ with valid data on the ID lines. VA2~ triggers monostable U1, producing a short R/W~ pulse through U2. R9 and C3 determine the length of the write pulse.

Write Strobe

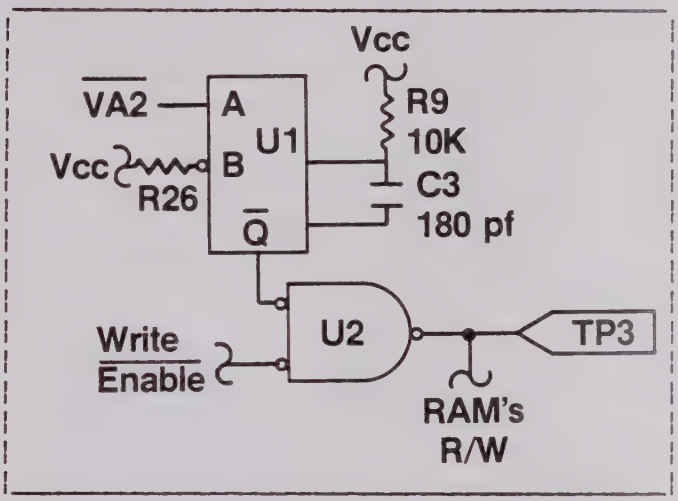

3.12.8
When the controller reads data, READ~ from U12 and VA2~ are low. This condition, decoded by U2, enables the RAM's output buffers to gate the stored data to the ID lines.

Output Disable

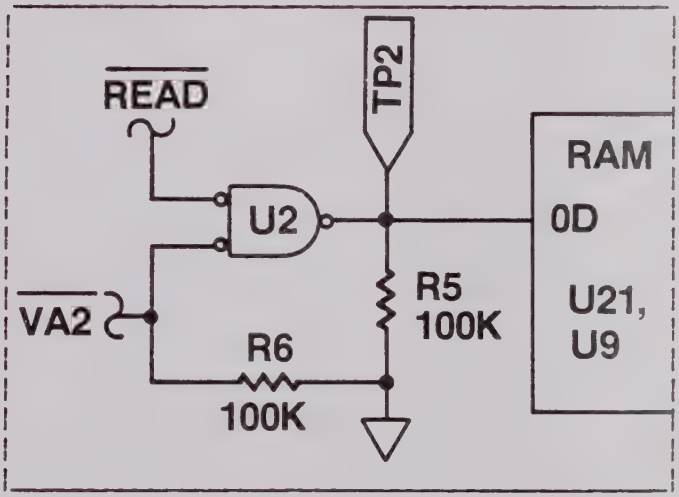

3.12.9
When power is removed, Q3 is off and battery BT1 powers the RAMs through Q4. With Q3 off, the gate of U3 is held high, turning Q5 on to disable CE1~. When power is initially applied or removed from the instrument, 'power-down' circuitry restricts access to cal memory's RAMs. This prevents random data from being written into memory. When Vcc reaches a valid level, Q3 turns Q4 and U3 off disabling the battery and enabling CE1~. The RAMs are now powered through CR1.

Power Down Protection

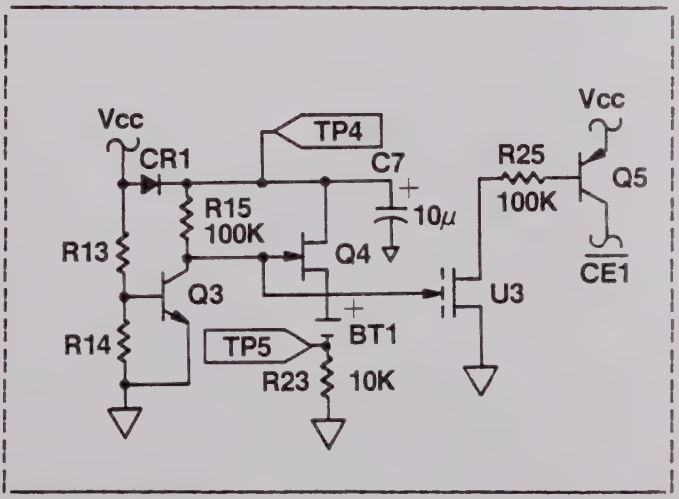

3.12.10
The cal memory module comes fully equipped with 'spare parts' that apparently do nothing. The only explanation I can offer is that future expansions may make use of these parts... (and cows may learn how to fly).

Spare Parts

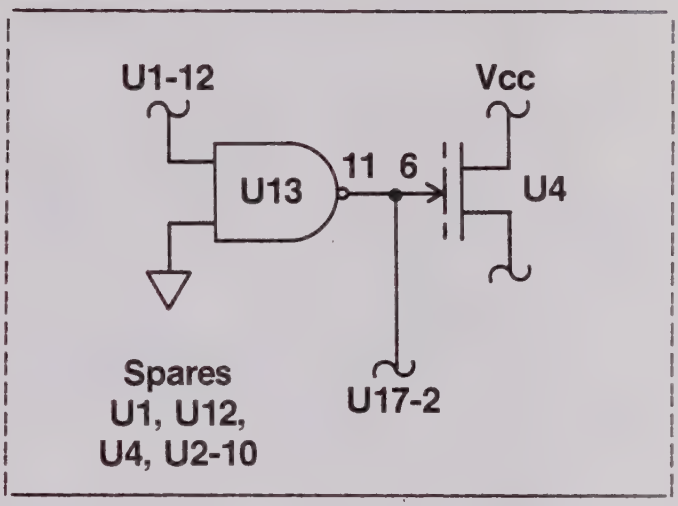

3.13.1
IEEE bus lines are driven and read from eight typical circuits in U21, U24, U20, and U27. Outputs from the bus drivers are pulled up through 4.7K resistors on the module side. The open collector 'or' gate for the drivers gate data onto the IEEE bus.

IEEE Bus: DI01 - DI08

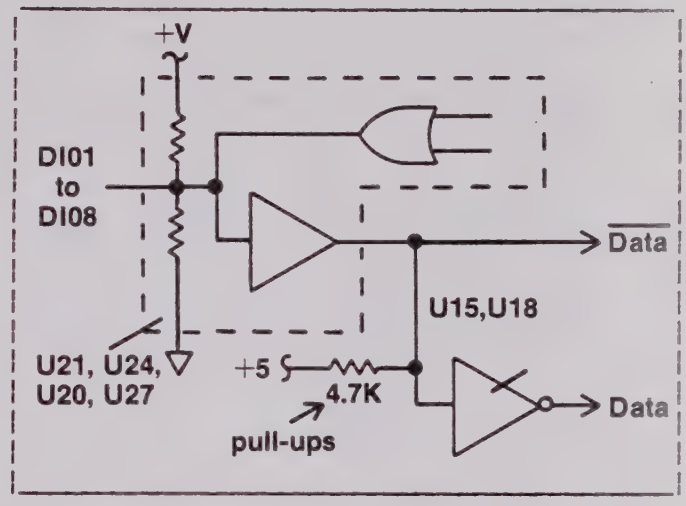

3.13.2
Three handshake lines coordinate IEEE data transfers. They are data available DAV, not ready for data NRFD, and not data accepted NDAC. When DAV goes low U10, C1, R1, and U3 send a delayed signal to U4, asserting the NRFD line through U20. NDAC is asserted when the controller reads data from the IEEE module.

IEEE Bus: Handshake DAV, NRFD, NDAC

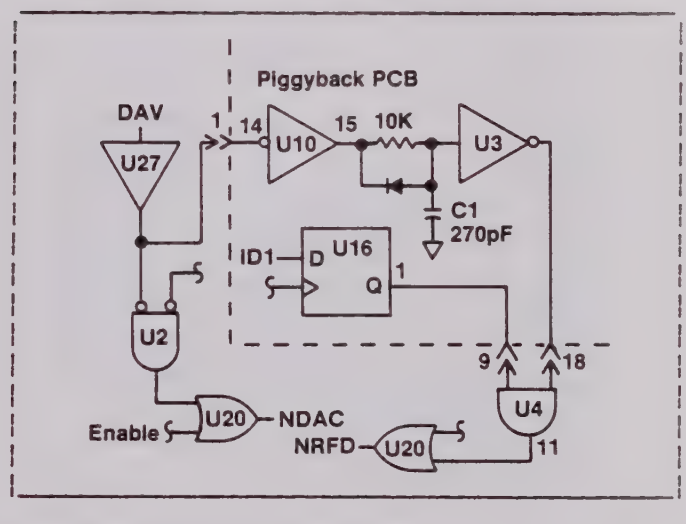

3.13.3
There are five IEEE control lines. Two lines, ATN and IFC, control bus transactions. When ATN is active, all instruments on the bus must respond to commands from the instrument controller. This signal is used on the 8500 IEEE card to disable any data out through U32. ATN is also sent to U6, U3, and U19 for 'my listen address' MLA, 'my talk address' MTA, unlisten UNL, and the bus command decoders U1, and U17.

IEEE Bus: Control ATN, IFC

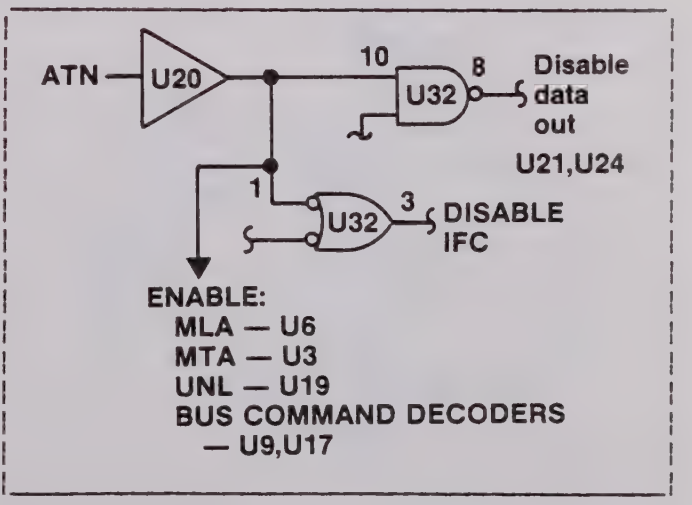

3.13.4
Negative true and complemented data values from the IEEE bus are used by the IEEE module. U15 and U18 invert IEEE bus data to 'positive true' levels.

IEEE Data and Address

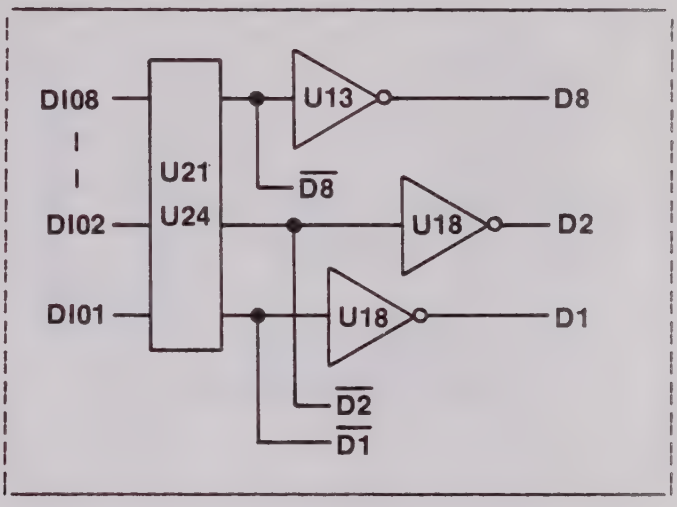

3.13.5
When the system controller asserts ATN, the five lower data lines from the IEEE bus are decoded by U6 through switches S1 to produce the MLA signal. Delayed DAV now clocks MLA from U6 into U11. When MLA is decoded, the IEEE module is ready to accept commands from the system controller.

My Listen Address (MLA)

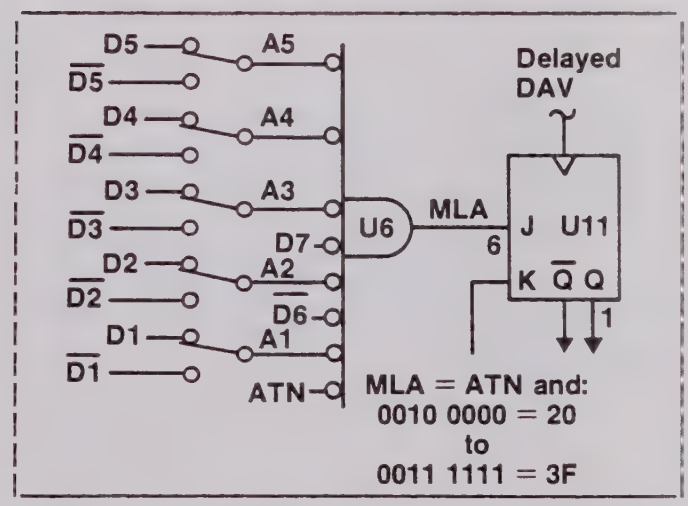

3.13.6
U3 decodes MTA when the lower seven bus address lines are valid and ATN is low. This condition is strobed into U11 by the delayed DAV signal. When S2 is closed U11 stays set holding the module in the talk only mode.

My Talk Address (MTA)

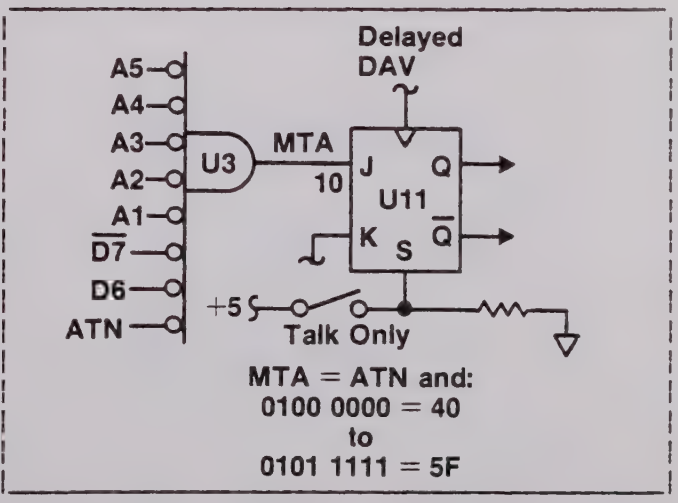

3.13.7
The 'unlisten' bus command ends bus transactions from the system controller. U19 decodes UNL when the lower seven bus address lines are valid and ATN is low. U11 is cleared when delayed DAV clocks U11 with a one at its 'K' input.

Unlisten

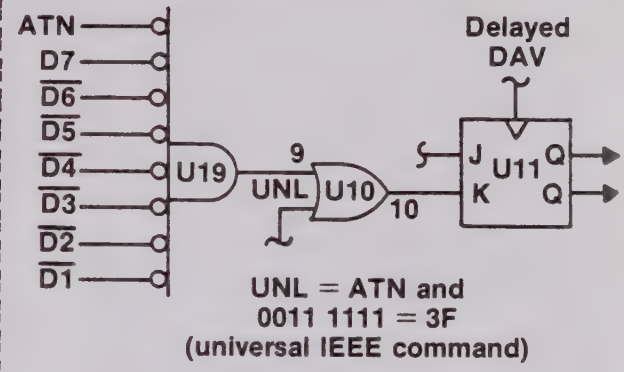

3.13.8
This diagram shows how the module decodes four of the bus commands. Notice that ATN must be low for these signals to be decoded. The lower seven IEEE bus data bits decoded by U12 and U9 enable U8 and U5 to select one of four commands.

DCL, GET, SDC, GTL

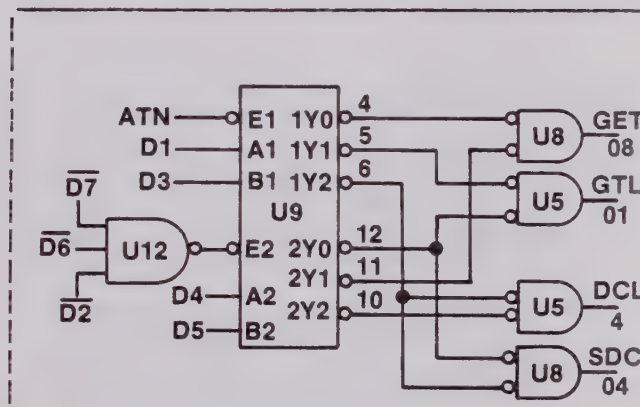

3.13.9
Three of the remaining bus commands are enabled by U8 and U5 to produce SPE, SPD, and LLO. The 2Y and 1Y inputs to U8 and U5 come from decoder U9.

SPE, SPD, LLO

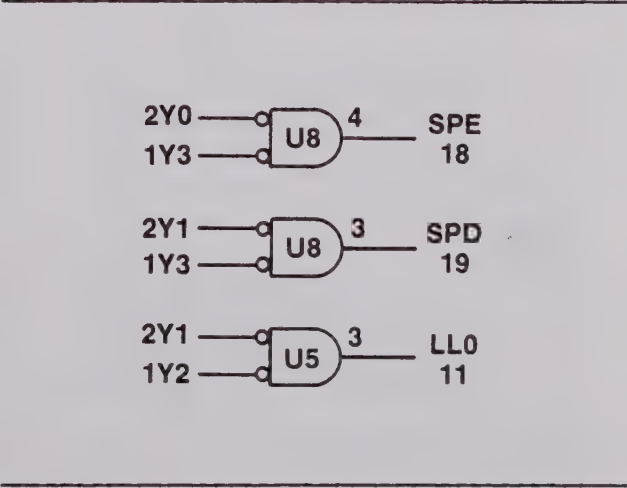

3.13.11
When the 8500 controller card addresses the IEEE module, an ACK signal is generated through U6 and Q8. The controller uses all six IC lines to address five functions on the module. IC lines are decoded by U12 and U13 and sent to U8 and U9 for further decoding. The combination of INA and INT is also acknowledged.

Interbus Address and ACK

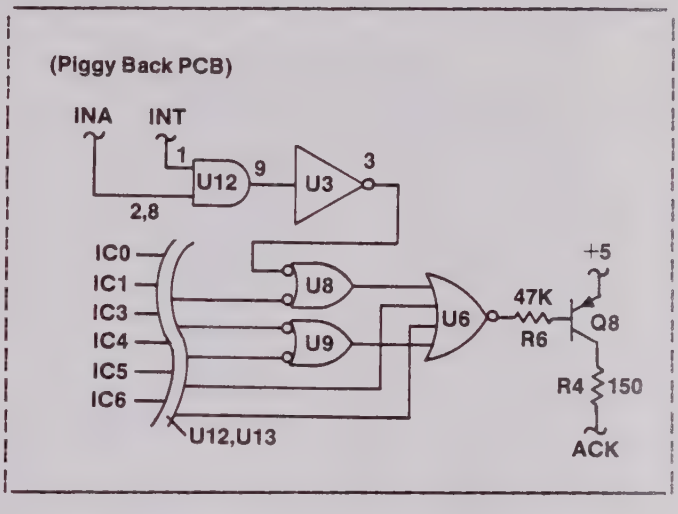

3.13.12
U12 and U13 decode five addresses from the 8500 controller. The response register is enabled when IC1, IC4, and IC5 are high. A binary representation of this IC line combination is 0011 0010 or 32 hex. The diagram shows all five functions and their hex addresses.

The Five Addresses

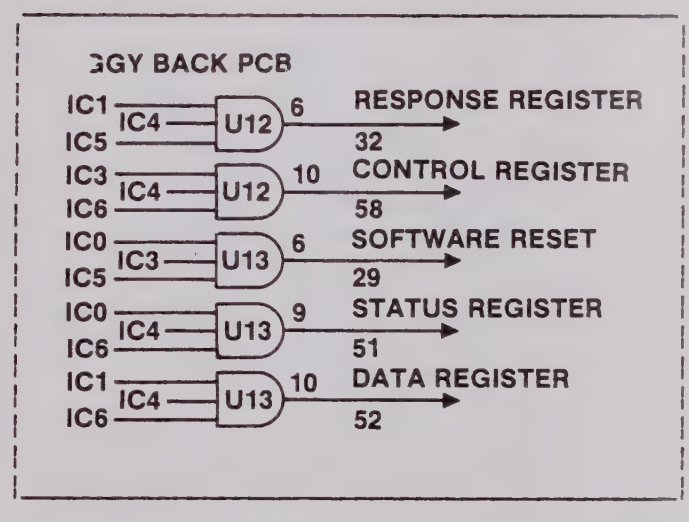

3.13.13
Data from the controller card is strobed into U26 and U29 by addressing the response register. Data is inverted by U22 and U25 to be compatible with the 'negative true' IEEE bus lines.

Interbus Data Input

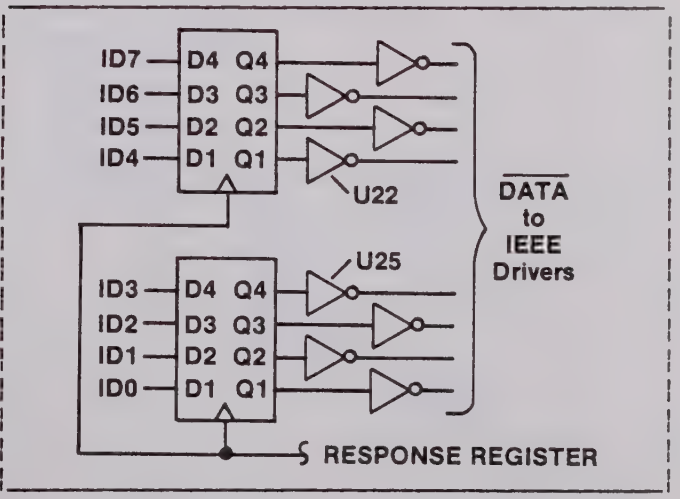

3.13.14
Control data from the controller card is strobed into U16, U14, and U11 when the 'control register' is addressed. This function also gates ID0 through U8, U5, and U2.

Interbus Data Input

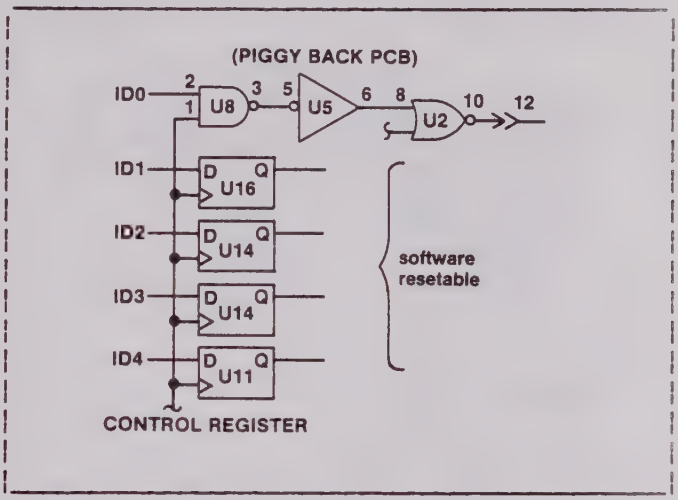

3.13.15
The controller card addresses the 'data register' to read IEEE data onto the ID bus through U30 and U31. The 'status register' is addressed to enable decoded interface messages to the ID bus through U31 and U28. When the IEEE module generates an interrupt, the INT signal is applied to U28 and gated to ID3 when INA goes low. This is how the controller identifies the interrupting module.

Interbus Data Output

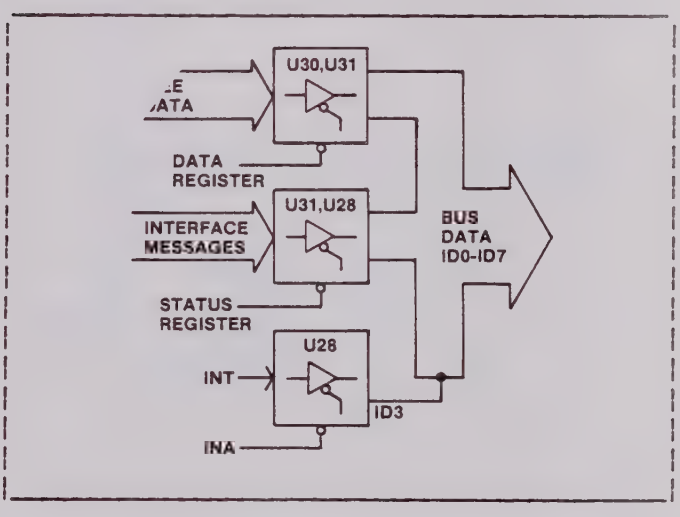

3.13.16
Interrupts are triggered when delayed DAV is active. This signal is inverted by U5, buffered by U7, delayed by R7 and C4 and applied to the inputs of U8. This produces a short pulse, or glitch for triggering the interrupt flip flop.

Interrupt: Delayed DAV

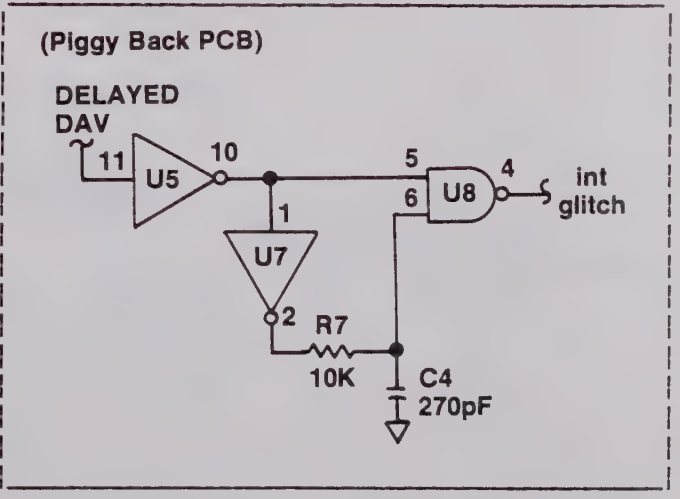

3.13.17
Interrupts are enabled through U2 when the controller writes a one into U14, setting its Q~ output low. When U1, the interrupt flip flop, receives its interrupt glitch from U8, Q~ goes low and U2 turns Q1 on. This pulls the INT line low through R3.

Interrupting the Controller

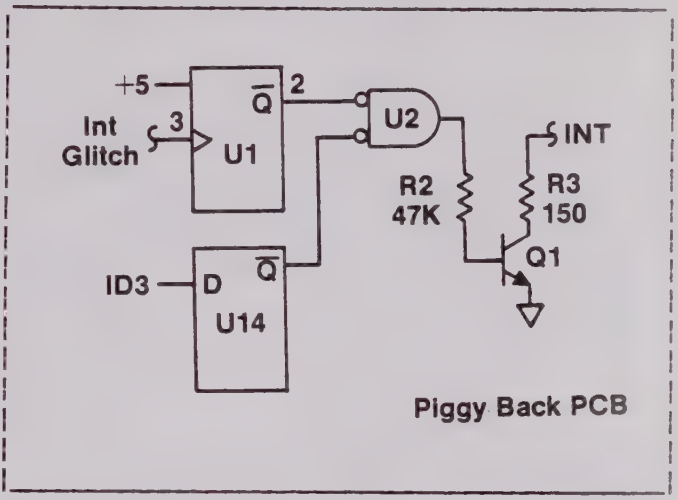

3.13.18
The controller module responds to interrupts by asserting INA. This clocks U1's Q output, pin 13 high and resets the interrupt flip flop through U2 and U5. The Interrupt flip flop is also reset when the controller addresses the 'software reset' function.

Clearing the Interrupt

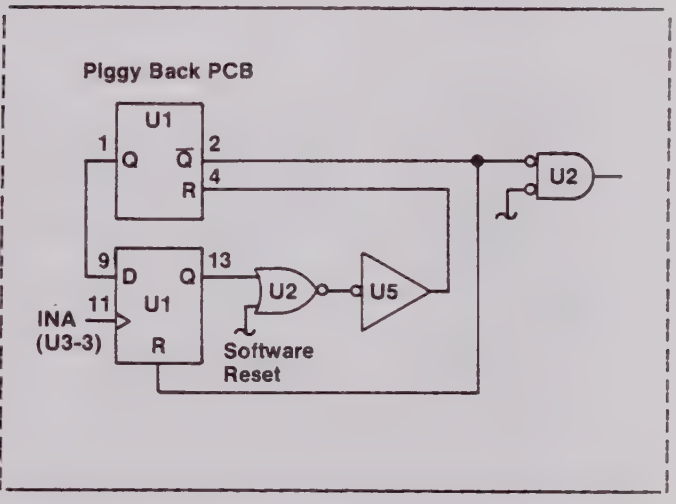

3.13.19
Active output control line SRQ is used by the IEEE module to get the attention of the system control instrument. When the 8500 controller writes a one into U14 by addressing the control register, U27 asserts SRQ.

Service Request: SRQ

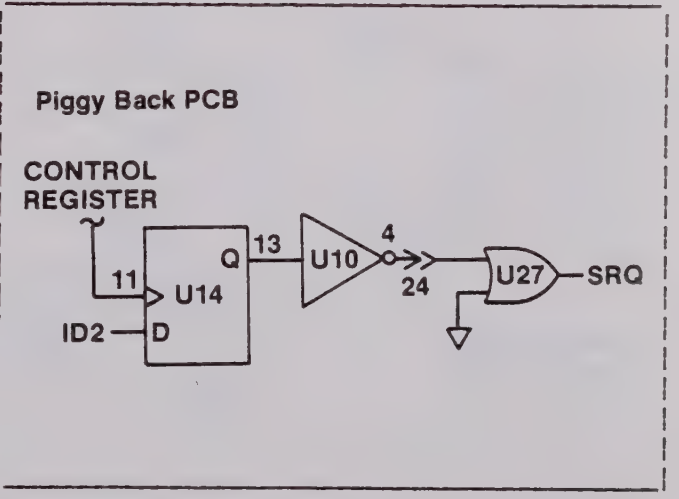

3.14.1
When power is initially applied to the instrument the UART is externally reset, (XR is held low). U5 is also reset, disabling interrupts from the serial module. When C6 charges to 2.5V, U2 pin 6 goes low releasing reset U5, and indirectly releasing XR to the UART. The controller addresses COUT to reset the UART.

Power On Reset

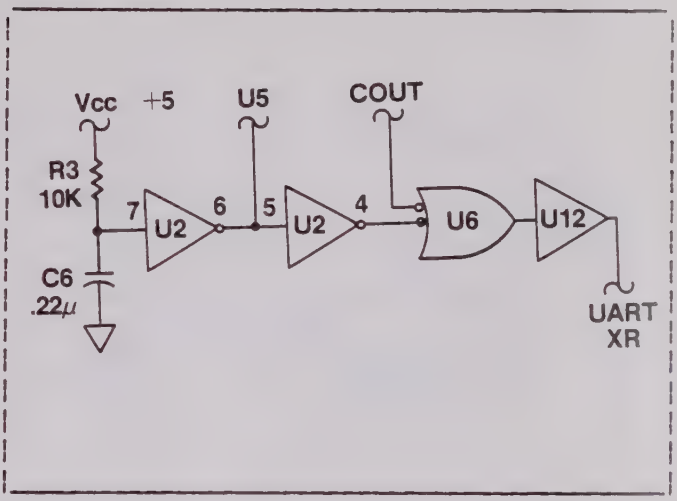

3.14.2
Data from the controller is written to the UART's DB inputs through buffers U12 and U13. The controller reads the UART's RD lines directly onto the bus. These data transfers are decoded when the controller addresses DATIN and DATOUT.

Data input/output

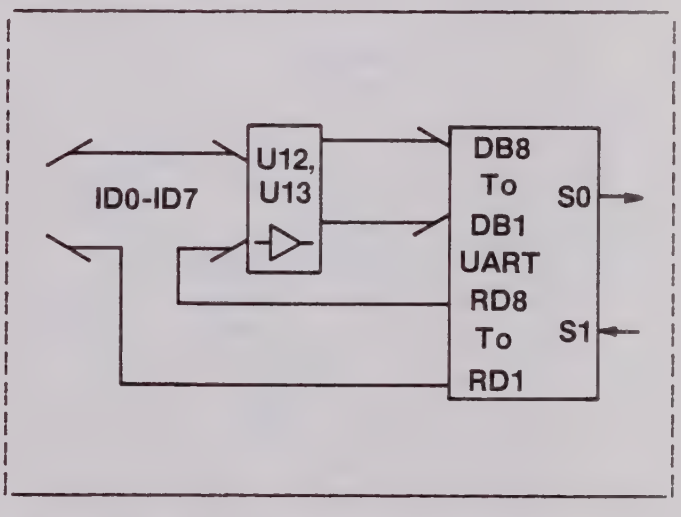

3.14.3
U3, the baud rate generator is clocked by crystal V1 at 2.4576MHz. The output frequency is selected by S4 - S7 to produce baud rates from 50 to 9600. U12 buffers U3's output before routing it to the UART transmit and receive clocks. U12 buffers the baud rate generator's output, sent to TCP and RCP, (transmit and receive clock pulses).

Baud Rate Generator

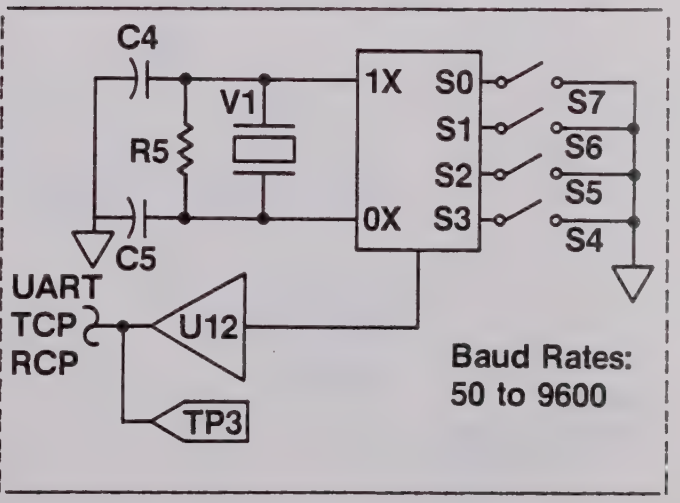

3.14.4
The General Instruments AY-5-1013A UART controls parallel to serial conversions and the timing required for receiving and transmitting characters. Jumpers and switches connected to U9 select even or odd parity, bits per character, no parity, and the stop bits.

UART: Select switches

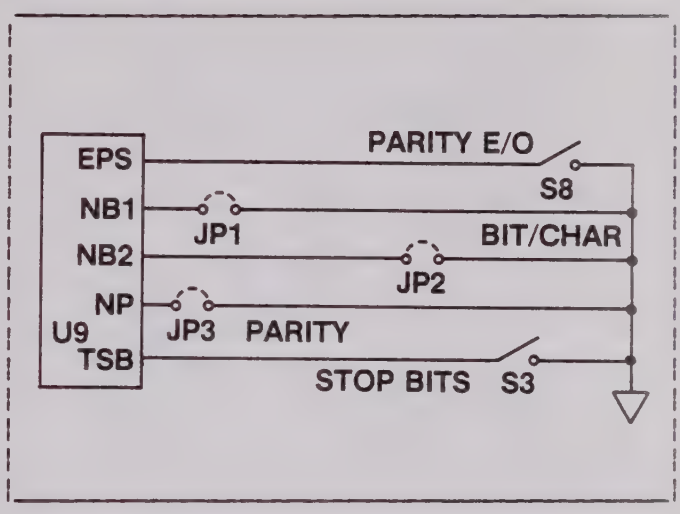

3.14.5
The +/-12V serial input stream is level conditioned by U1 and sent to the UART's serial input via U6 and U2. Output voltages from U1 pin 2 are TTL levels. When in the 'current loop' mode, S2 is switched to ground, disabling U1.

Serial Input

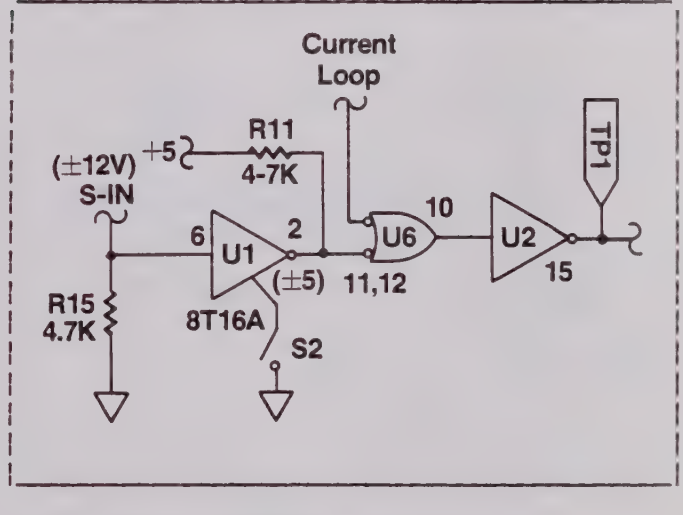

3.14.6
Serial outputs from the UART are conditioned by U4 to produce +/-12V. U2 and Q3 drive the 20mA current loop controlled by R9 and R10.

Voltage and Current Serial Outputs

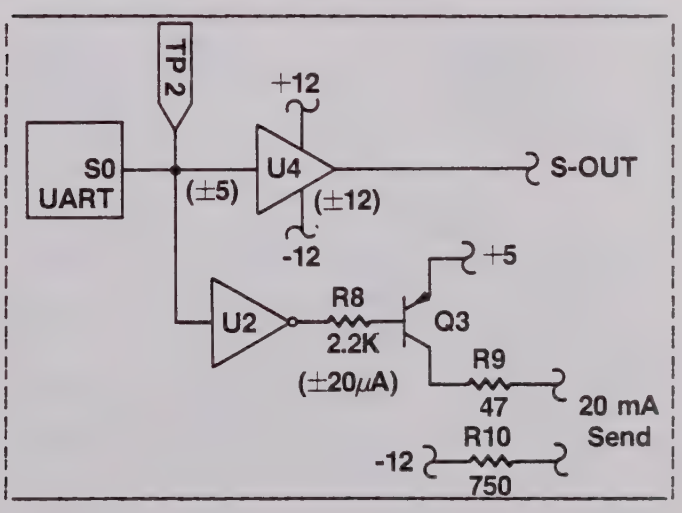

3.14.7
Current loop inputs are received by U2 and sent to the UART when S1 is closed. CR1 protects U2's CMOS input from swinging more than a diode drop below ground.

Current Loop Serial Input

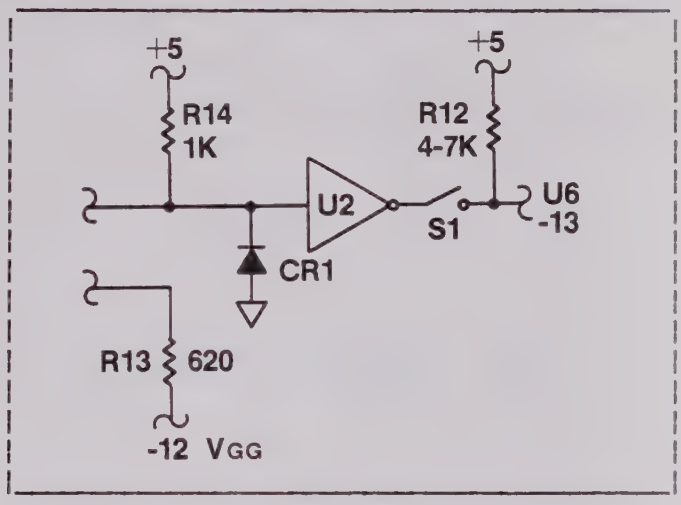

3.14.8
The serial module acknowledges four interface addresses: STATIN, DATIN, COUT, or DATOUT. A fifth function that the serial card recognizes is interrupt acknowledge, INA. These inputs are partially decoded by U10, turning Q2 on to pull the ACK line high through R4.

Digital Addressing: ACK

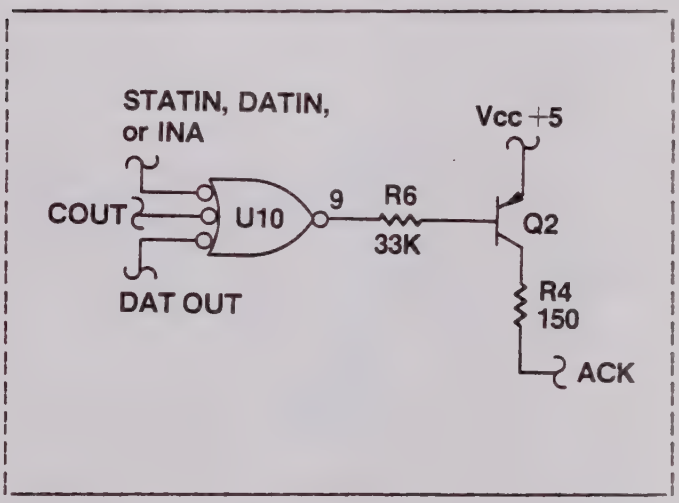

3.14.9
UART status is read by the controller on ID0 through ID3. When IC0, IC4, and IC6 are high, U7 enables U8, gating the UART's status onto the ID bus. The four status conditions are data available, overflow, transmit buffer empty, and framing error.

Status Input: STATIN

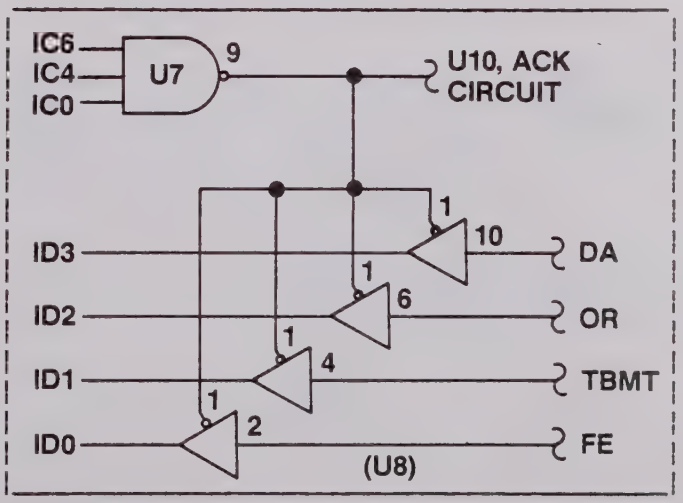

3.14.10
The serial card asserts INT through Q1 when interrupts are enabled and DA is active. The controller then asserts INA. The serial card responds by asserting ACK and gating the INT signal to ID2 through U8. This tells the controller that the serial card is the interrupting device.

INA

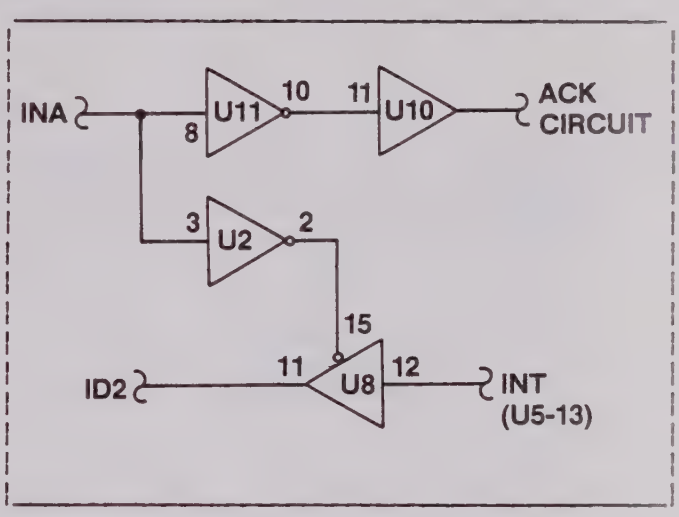

3.14.11
When data is available in the UART, (DA = high) the output from U11 goes high, toggling U5's Q output high. Q1 then turns on through R2, pulling INT~ low. When the controller asserts INA, U11 forces U5 to toggle to its reset state. U5 now releases INT~ and is ready to accept the next DA interrupt. Interrupts are disabled when INT ENABLE is high, holding U5 reset.

Interrupt

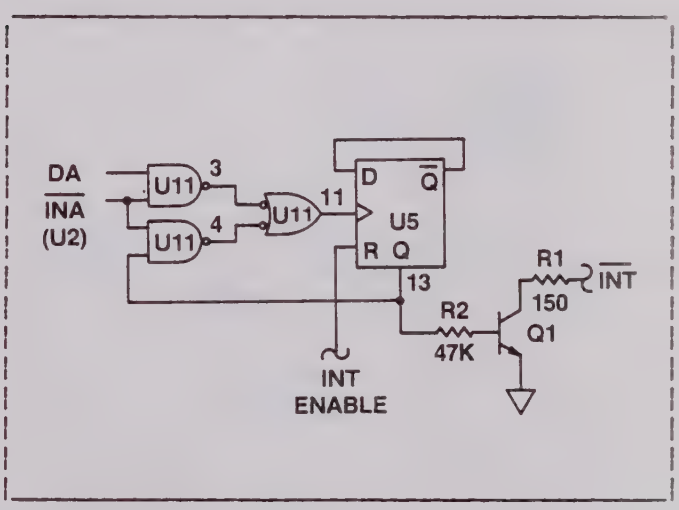

3.14.12
Interrupts are enabled when the controller writes a zero into U5, reseting its Q output. The controller addresses U5 by setting IC2, IC4, and IC5 high. U6's output then goes low, clearing the UART through U6. When the address is retracted U6 goes high clocking ID7 into U5.

Interrupt Addressing

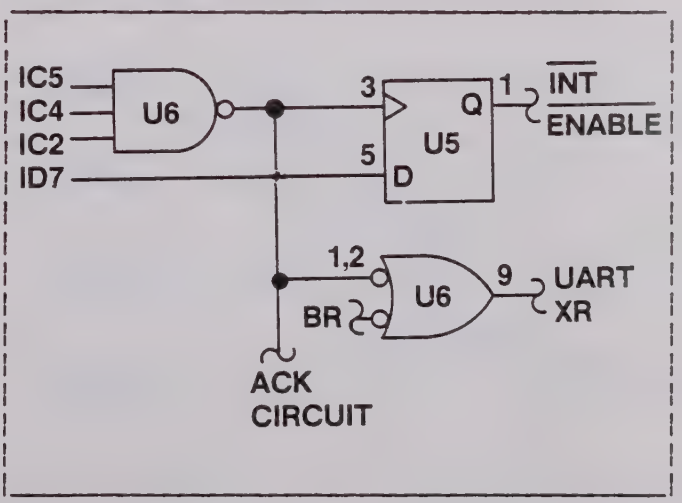

3.14.13
The controller writes characters into the UART by addressing DS~ through U7 and U12. When IC3, IC4, and IC6 are high the outputs form U7 and U12 go low pulsing DS~ on the UART. ACK is then asserted and the controller retracts the address. When U7 goes high, data on the ID lines is written into the UART.

Data Output

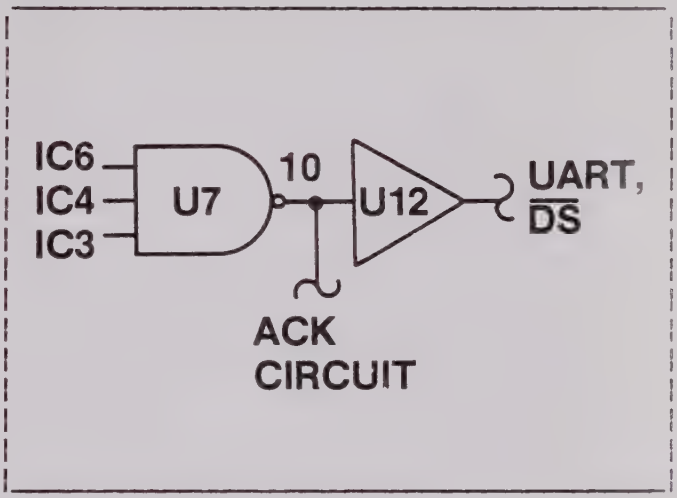

3.14.14
The controller sets IC1, IC4, and IC6 high to strobe the RDE~ line and read the received data character. At the same time, RDA is strobed, clearing the UART's serial input buffer for the next character. ACK is asserted from U10 when DATIN, (U7-6) goes low.

Data Input

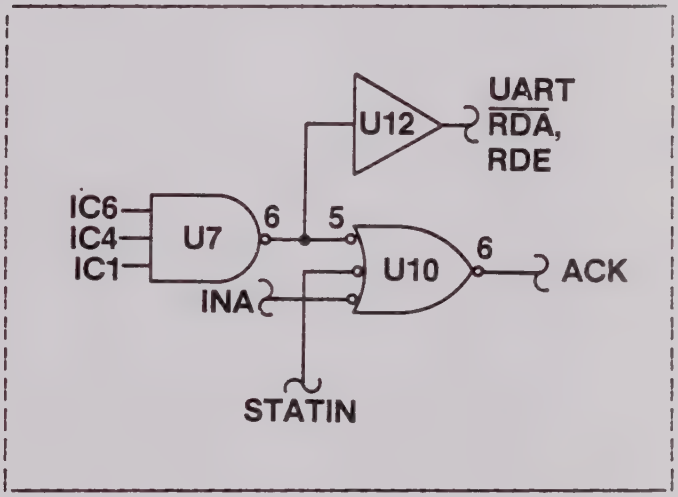

3.14.15
The serial option uses three unguarded supplies: +12V, +5V, and -12V. C1, C2, and C3 provide additional filtering for the card.

Power Supply Filtering

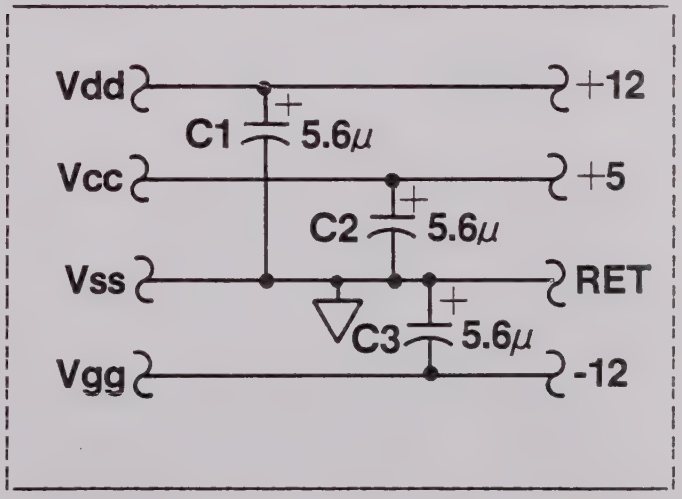

3.16.1
AC voltages are switched from the high quality bus to the RMS converter through protection resistor R22 and K1. R3 and C1 capacitively couple the input to R1 and the range amp. When taking AC + DC measurements K2 is closed routing the input directly to R1. CR6, CR7, CR21, and CR22 provide a +/-7V limit that protects the input amp. When measuring AC currents, K7 enables RT1 and RT3 from the current converter.

Relay inputs

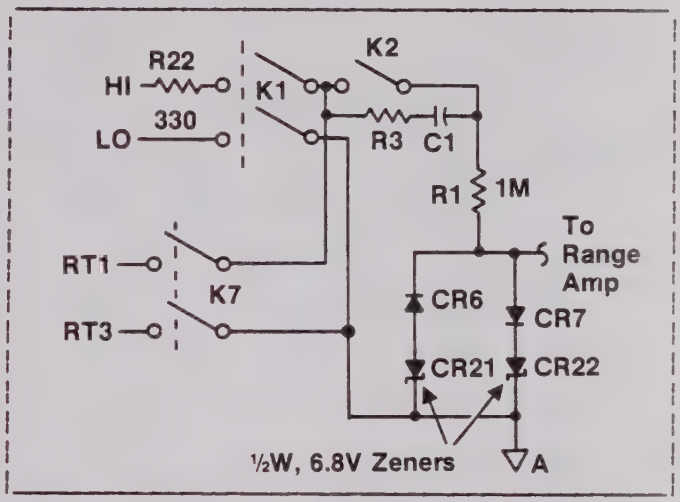

3.16.2
Dual FET Q1 provides a high impedance, low offset input stage for the range amp. Input voltages are converted to currents by R1, then applied to the range amp's inverting side at Q1. This signal also drives the shield through buffer Q2. R89, R81, and R77 bias Q1 and R10, R9, and R12 provide zero adjust. Differential outputs from the drains of Q1 are sent to U3.

Range Amp: Input FET

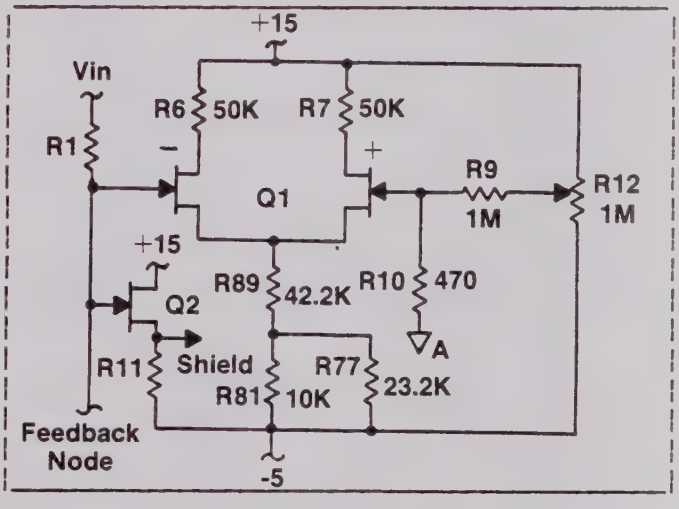

3.16.3
Gain for the range amp is provided by op-amp U3, an LM318. Four feedback paths control the gain for the four AC ranges. R13, R14, and R50 are in parallel with feedback paths enabled by K4, K5, and K6. Range amp outputs are sent to both the balance amp, and the squaring amp. CR24, CR18, CR20, and CR25 protect the square root amp by limiting inputs to 10.7V.

Range Amp: Gain & Ranging

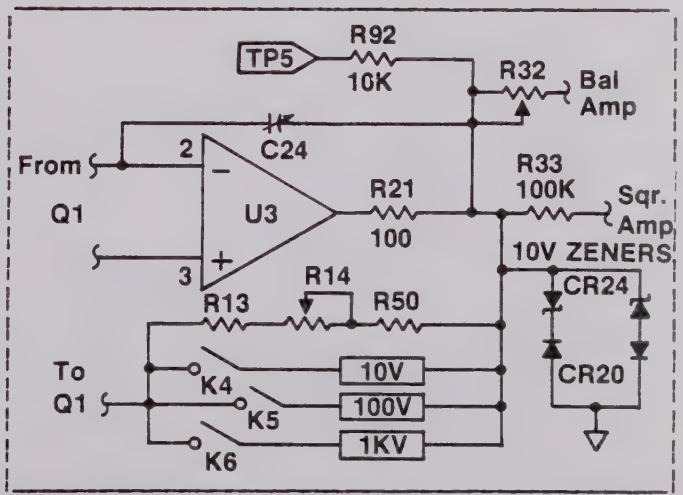

3.16.4
The balance amp combines U4, Q10, CR14 and CR16 to form a precision half wave rectifier. During negative half cycles, inputs are converted to positive currents through R31. When the input is positive CR16 turns off and no current flows through R31. R32 sets the gain of the balance amp while R26, R28, R27, and R42 adjust the zero. CR15 keeps U4's output closer to its linear range. Q10 is biased though R49 with CL1 providing a constant current load.

Balance Amp

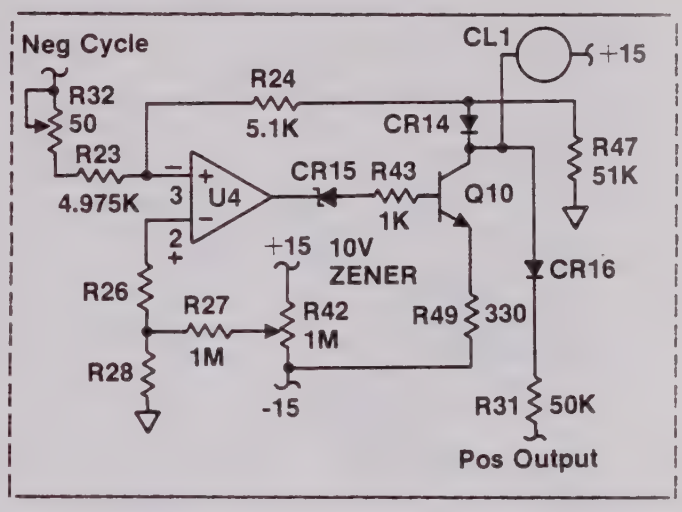

3.16.5
The squaring amp uses a base-emitter junction in its feedback leg to square the value of the input. Signals at R31 and R33 are added at the inverting side of the squaring amp, (non-inverting side of U5) producing a positive full wave rectified current. This positive input produces a negative full wave at the output of U5, keeping Q11 turned on. R35, R34, R36, and R45 zero the offset .

Squaring Amp: Input

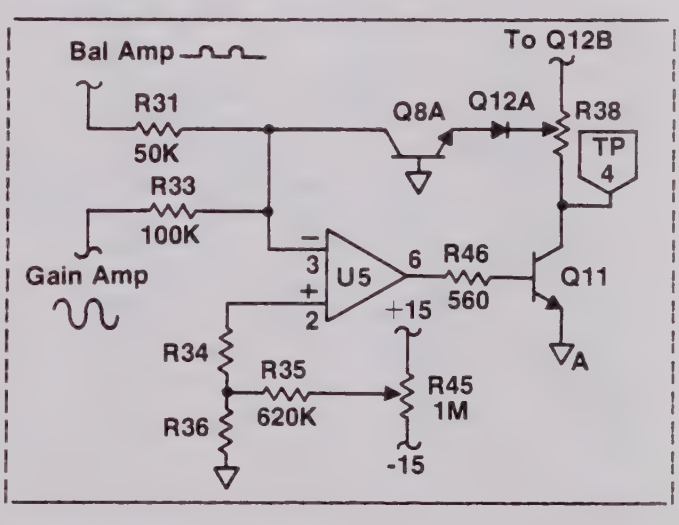

3.16.6
Feedback through Q8A and Q12A produces a logarithmic response, squaring the output voltage sent to Q12B. U5's output is normally negative, however if it does go positive, CR17 protects Q11 from excessive reverse bias. High frequency feedback for Q11 is coupled through C21 and buffered by Q7 before being applied to the base of Q11 through C22.

Squaring Amp: Feedback

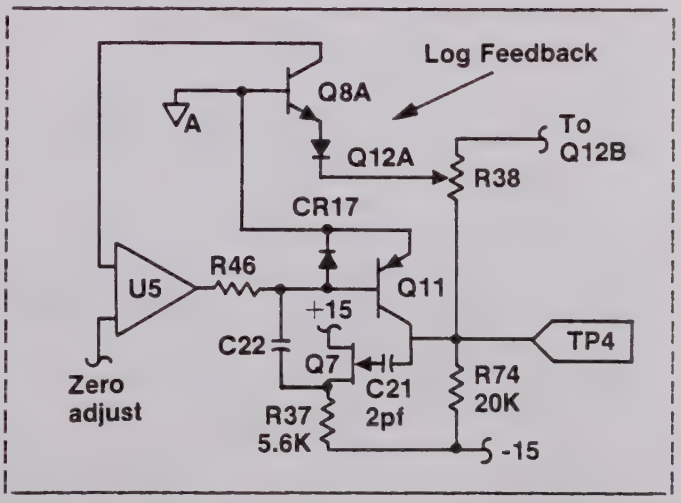

3.16.8
The output from the squaring amp is made linear by the square root amp U6, Q8B, and Q12B. The base-emitter junction of Q8B forms an anti-logarithmic feedback for U6. Q12B's output, (a negative voltage) is sent to the integrator amp for low pass filtering and phase inversion.

Square Root Amp

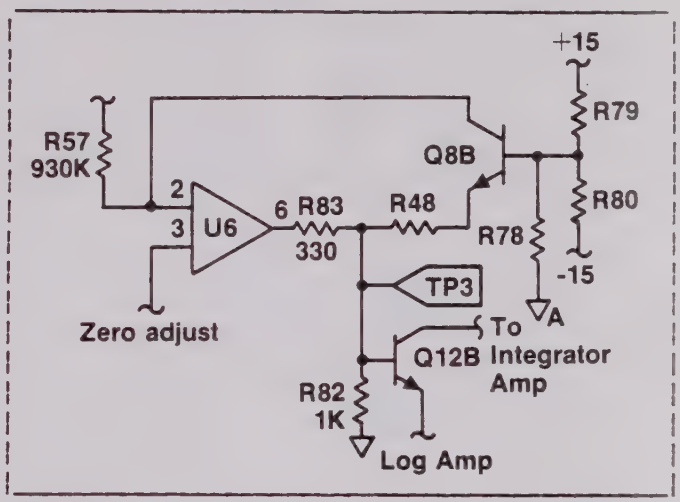

3.16.9
Negative full wave outputs from Q12B are applied to U7, the first stage of the filter amp. U7's output is low pass filtered by R68, C32, R69, and C33. U8 buffers the filter's output then multiplies it times two before feeding the it back to the input of U7 through R56 and R65. U8's gain of two is set by R87 and R88.

Integrator/Filter Amp

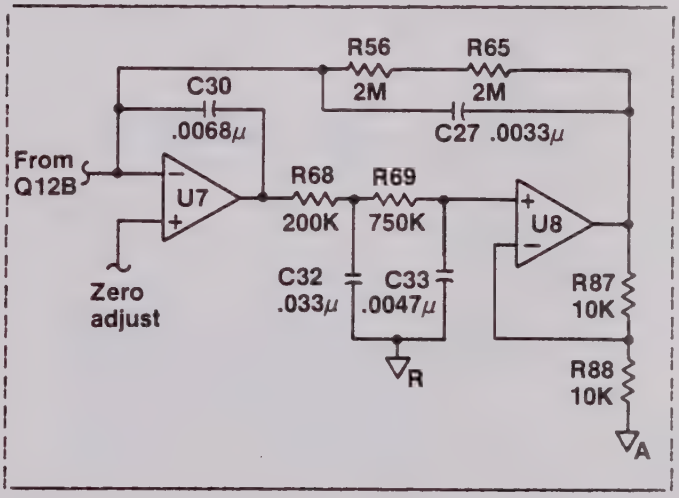

3.16.10
Frequency response of the filter amp is modified when Q16, Q17, Q13, and Q14 are switched on. These FETs enable additional parallel capacitors C34, C35, C28, and C29 to increase low pass filtering.

Switched Slow Filters

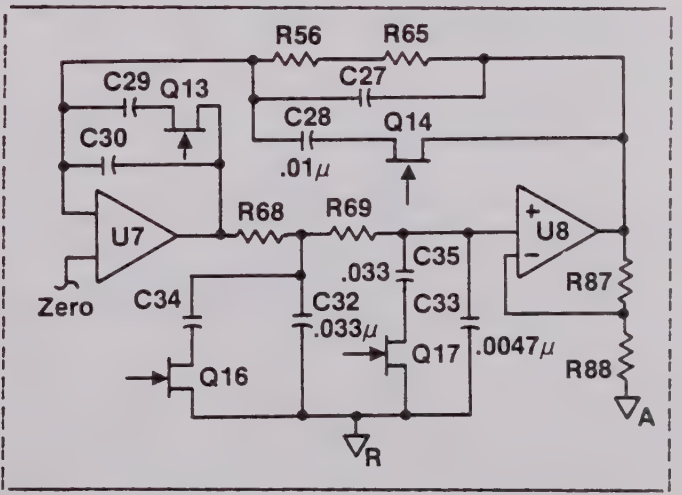

3.16.11
U8's positive output is gated onto RT6 when K8 is closed. CR11 sets the negative supply for U8, (pin 4) at -5V, with the positive supply at +30V. This keeps the output of U8 in its linear range.

Output Amp and Relay

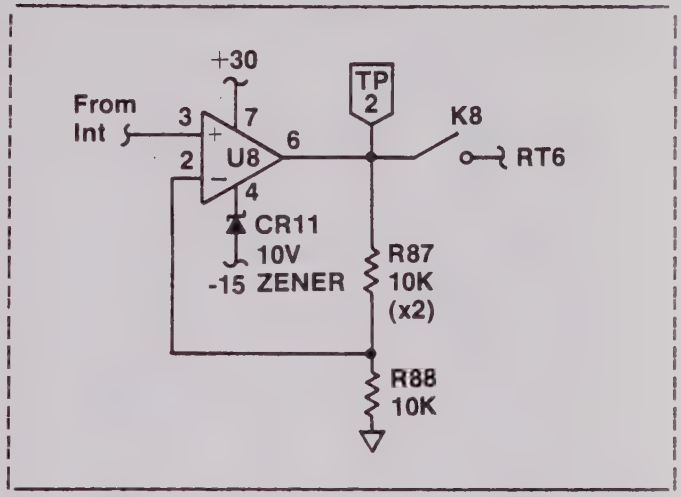

3.16.12
The RMS module is addressed when IC0, IC2, and IC4 are high. The RMS card acknowledges the address though Q20 when U1-4 goes low. Data on the ID lines latches into U10 when the controller retracts the address and U1-4 goes high.

Data, Address, and ACK

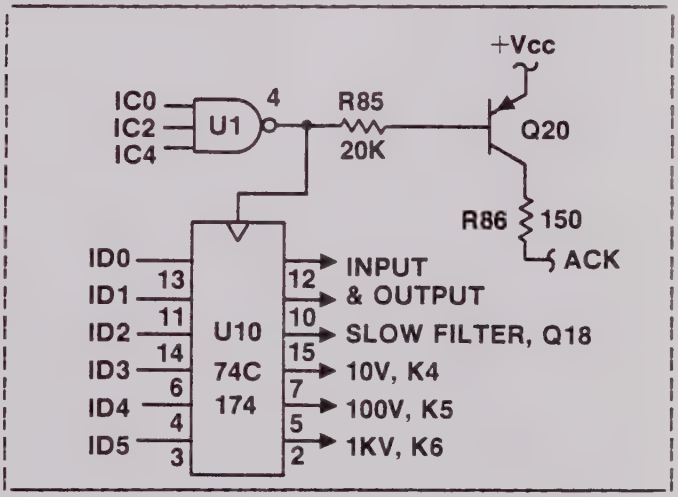

3.16.13
Output relay K8 is closed when Q4 is on. U1's inputs are latched ID lines ID0 and ID1. When the RMS card is enabled, one or both of these lines goes low to enable K8. When K8 switches off, its coil holds a potentially high voltage stored charge, called a kickback voltage. CR4 limits this voltage to a diode drop above Vcc to protect Q4.

Transistor Relay Drive

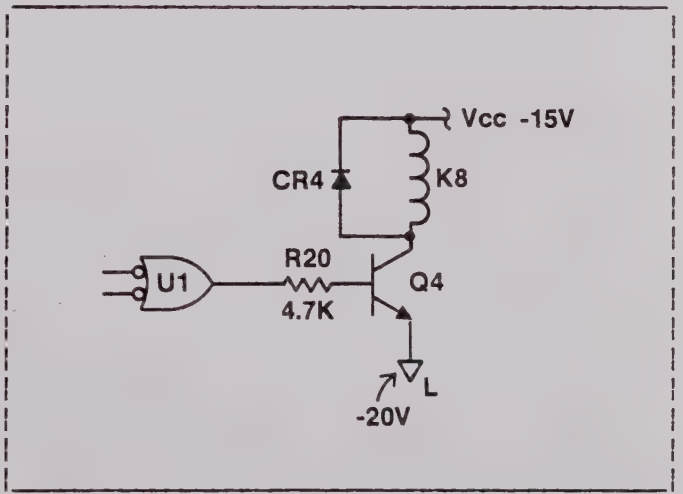

3.16.14
Input relay K1 requires two parallel outputs from U2 to energize its coil. K6 needs only one output from U2 to turn it on. Relays K4, K5, and K6 are turned on in much the same way. U9 buffers and inverts U10's latched ID line, then U2 inverts and drives the relay. CR3 and CR10 are kickback protection diodes.

IC Relay Drive

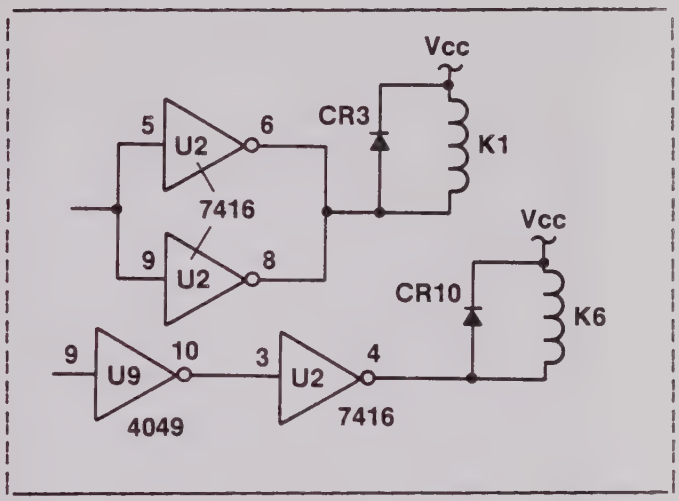

3.17.0
This appendix offers a brief overview of the 8080 microprocessor for those of you who are already familiar with microprocessor technology but need specific information about the Intel 8080 itself. For those of you who have little or no microprocessor background may want to refer to the list of general technology text books at the end of this appendix.

The 8080 Microprocessor

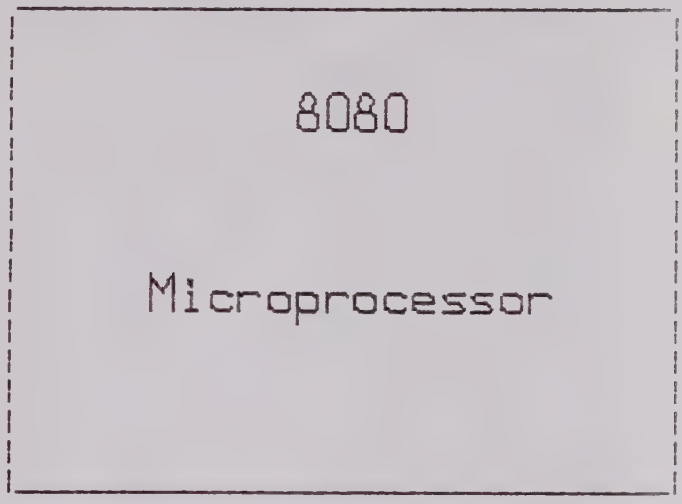

3.17.1
The 8080 is an early generation eight bit microprocessor. It requires the use of three power supplies, +5, +12, and -5, and high level, (at least 9V) two phase clocks. Processor status is asserted on the data bus on each instruction cycle and is used for decoding interrupts and I/O operations.

8080 Block Diagram

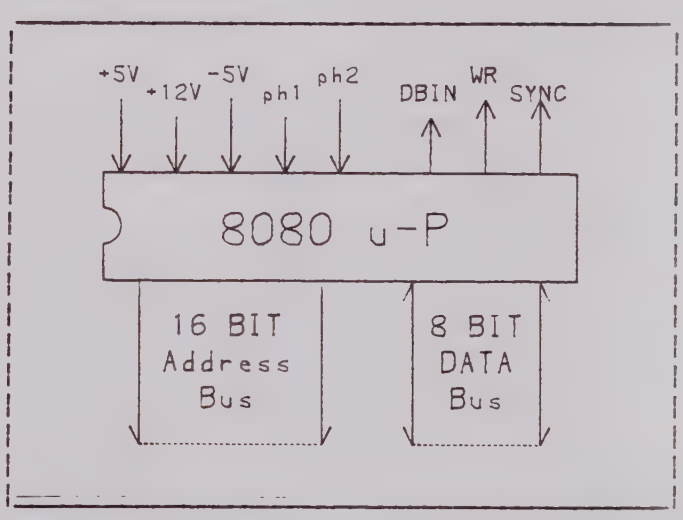

3.17.2
The 8080 uses it's eight bit bi-directional data bus to transfer instructions and parameters into and out of its internal registers. Control signals DBIN, used for reading, and WE, for writing, clock data to and from memory. The data bus is held in tri-state on reset and when the HOLD line is active.

8080 Data Lines

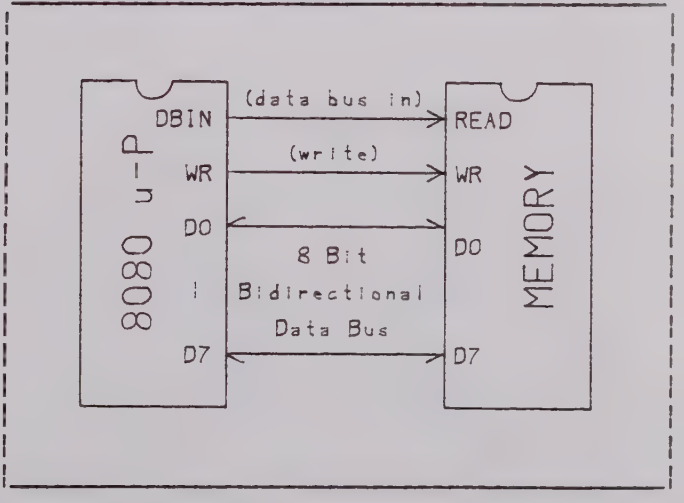

3.17.3
The sixteen address lines are used for selecting memory or I/O locations. The address bus is primarily in it's output state, but will go into tri-state if the HOLD line is active. When troubleshooting an 8080 based card, the address lines are a good 'first place' to check with a scope. If these lines are active, the processor and it's clocks is probably in good shape.

8080 Address Lines

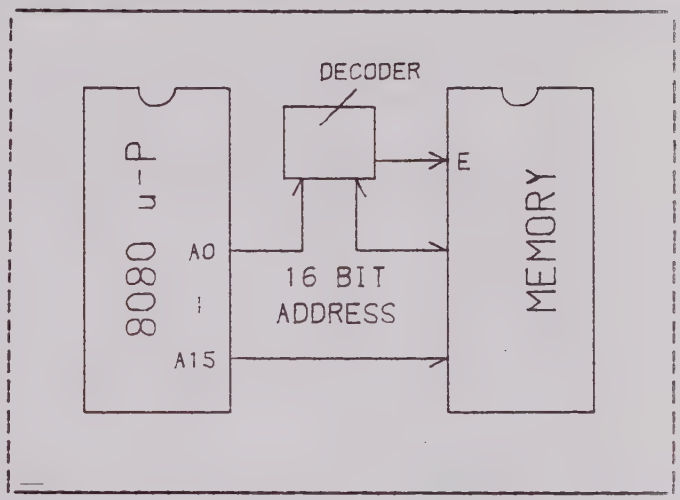

3.17.4a
SYNC indicates the start of each processor cycle and is used to gate status information on the data bus into external control registers. DBIN and WR~ control data bus reads and writes. WAIT is active when the processor has entered a wait state in response to the READY input signal. It's usually used to hold external gates in a static state until the ready is retracted.

8080 Control Line Outputs

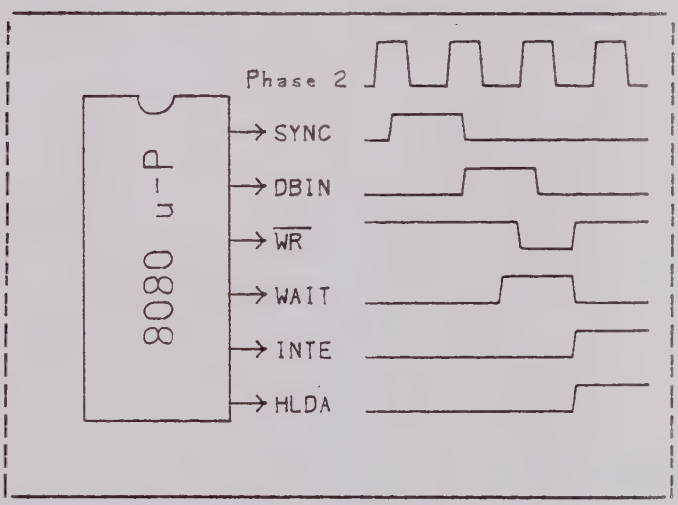

3.17.4b
RESET clears the 8080's interrupt register and sets it's program counter to zero. It must be valid for at least three clock periods. When INT is asserted, the processor accepts a single instruction, (sometimes called a vector) to redirect it's program flow. This mechanism allows external devices to modify the instruction flow of the program in process. INT instructions are usually 'RSTs' that vector program flow to lower memory. READY is used to put the 8080 to sleep. When READY is absent the processor will enter a wait condition. It waits until the READY is pulled back high.

8080 Control Line Inputs

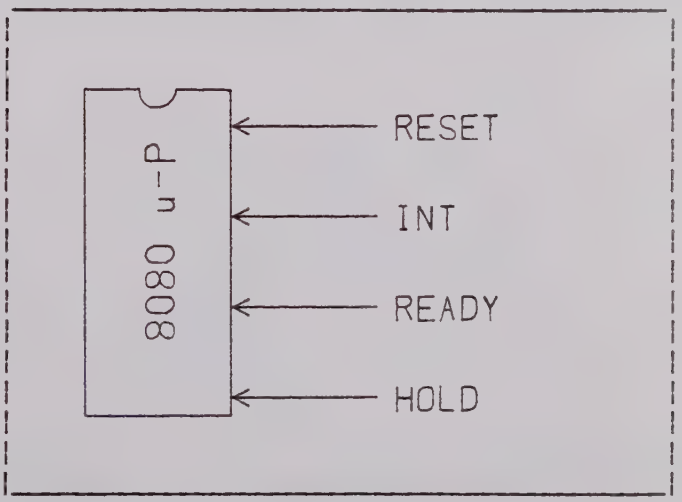

3.17.5
At the beginning of each instruction cycle SYNC gates the 8080's internal status onto the data bus. INTA, (bit 0) is active when an interrupt input when the 8080 is ready for and interrupt instruction. OUT, (bit 4) indicates that an output instruction is being executed, and INP, (bit 6) is active on input instructions. When OUT or INP is active the lower eight address bits, A0 through A7, are used to select up to 256 I/O devices. The lower eight bits are copied to the upper eight bits on all input and output instructions.

8080 Status Information

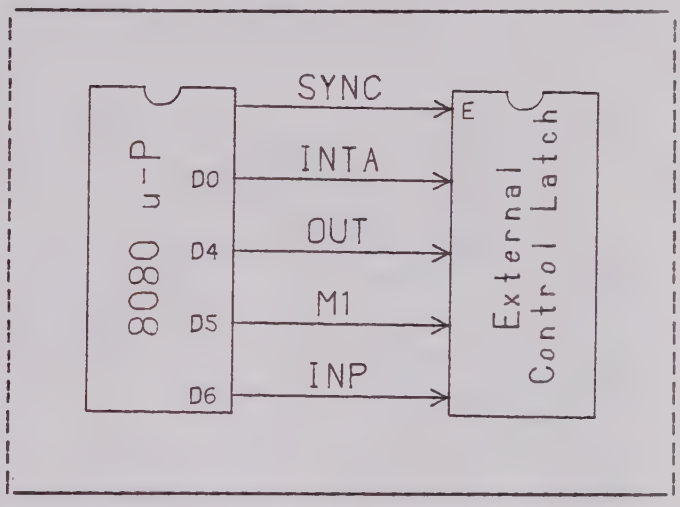

3.17.8
The signals required to synchronize and run the 8080 are provided by the 8224 clock driver. The block diagram shows it's inputs and outputs. The phase 1 and phase 2 signals swing from zero to plus twelve volts, (Vdd).

The 8224 Clock Driver IC

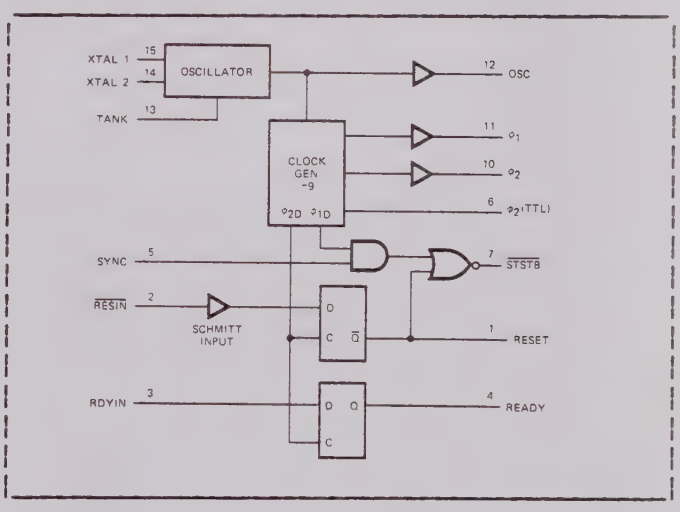

3.17.9
The total cycle time is determined by the crystal frequency divided by nine.

8224 Clock Driver IC: Timing

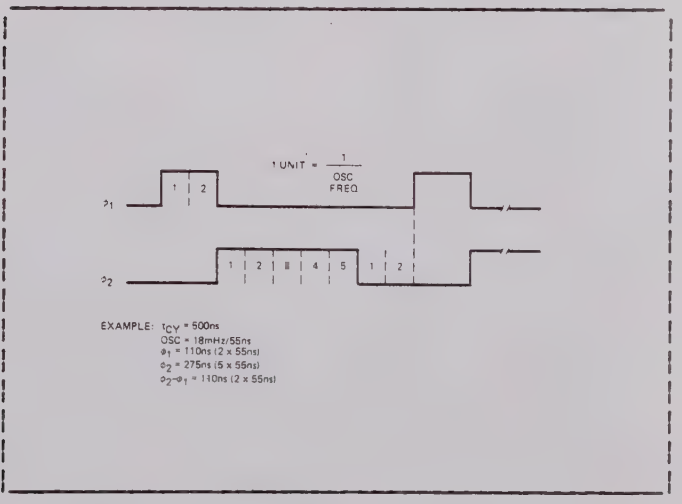

3.17.9
Here's a list of 8080 and similar processor technology books.
1. MOS/LSI Data Book
 from Advanced Micro Devices
2. Programming the Z80, Sybex
3. Z80 CPU Manual, Mostek

8080 General Reference Material

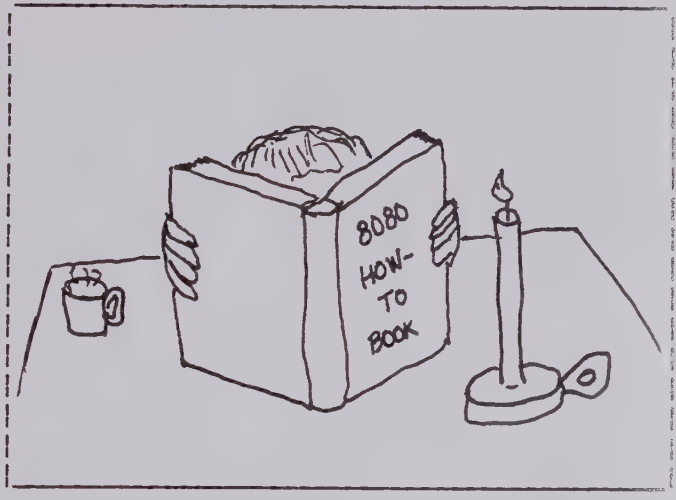

Application Bulletin

FLUKE

AB-25

FLUKE 8500A/8502A IN SYSTEMS

TABLE OF CONTENTS

SECTION	TITLE	PAGE
PART 1	**REMOTE PROGRAMMING THE FLUKE MODEL 8500A/8502A**	**3**
	INTRODUCTION	3
	PROGRAMMING	3
	IMMEDIATE CHARACTERS	4
	TERMINATION CHARACTERS	4
	COMMAND CHARACTERS	5
	FUNCTION COMMAND CHARACTERS	5
	RANGE COMMAND CHARACTERS	6
	MODIFIED COMMAND CHARACTERS	6
	CONTROL COMMAND CHARACTERS	7
	THE ASCII DATA OUTPUT FORMAT	8
	MEMORY COMMAND CHARACTERS	9
	NUMERIC ENTRY FORMAT	9
Part 2	**INTERFACING THE FLUKE MODEL 8500A SERIES USING THE IEEE-488 INTERFACE**	**11**
	INTRODUCTION	11
	INTERFACE DESCRIPTIONS	11
	SAMPLE PROGRAM FOR TEKTRONIX 4051	13
	SAMPLE PROGRAM FOR HP 9825A CALCULATOR	14
PART 3	**INTERFACING THE FLUKE MODEL 8500A/8502A USING THE BIT SERIAL INTERFACE**	**15**
	INTRODUCTION	15
	INTERFACE DESCRIPTION	15
PART 4	**INTERFACING THE FLUKE 8500A/8502A USING THE PARALLEL INTERFACE**	**19**
	-07, PARALLEL INTERFACE	19
	CASE EXAMPLES	24
PART 5	**8500A TIMING DATA**	**27**
	CONVERSION RATE PARAMETERS	27
	ANALOG SETTLING TIME, t_{AS}	27
	TRIGGER PROCESSING TIME, t_P	27
	A/D CONVERSION TIME, T_{AD}	28
	NUMERIC MODIFICATION AND CONVERSION TIME, t_N	28
	OUTPUT READING TIME, T_O	29
	SAMPLE COMPUTATIONS	30
PART 6	**EXTERNAL TRIGGER**	**32**
PART 7	**REAR ANALOG INPUT**	**32**
APPENDICES		**33**
	APPENDIX A - HIGH SPEED READING MODES	33
	APPENDIX B - TOGGLE MODE	35
	APPENDIX C - SCALING	35

REMOTE PROGRAMMING THE FLUKE MODEL 8500A/8502A

PART 1

INTRODUCTION

This applications bulletin outlines the remote operation of the 8500A series. Most digital voltmeters operate essentially the same regardless of whether they are operated locally or remotely. Remote interfaces generally convert the remote data to a format that the instrument's logic can interpret. The 8500A/8502A however, is different. Since the 8500A series uses a microprocessor, it handles remote operations in a considerably different manner.

The use of a microprocessor allows a great variety of features to be available to the user. The number of features is so great in fact, that only certain ones have been chosen for local front panel operation. An example of this is the trigger selection. In the local mode, only line synchronous reading rates have been provided; while in the remote mode, there are asynchronous reading rates. We have optimized the different features for best bench operation from the front panel.

When operated remotely, the user will find a greatly expanded measurement capability. This measurement power is available when any of the three remote interface options are selected. In addition to the expanded features, high speed modes may be used when operating remotely. Sampling speeds as fast as 500 samples/second may be selected when using the duplex parallel interface. During this operation, only raw binary data is output due to the speed requirements.

Programming cards for the 8500A and 8502A are available, which outline all of commands described here in part 1.

Three interface options are offered for use with the 8500A Series. These are:

Option 8500A-05, IEEE-488 Standard Interface
Option 8500A-06, Bit Serial Interface
Option 8500A-07, Duplex Register Parallel Interface

These interfaces are mutually exclusive, that is, only one may be installed in a given instrument. All interfaces are field installable merely by removing the Model 8500A/8520A top cover and inserting the interface into the rear slot. When equipped with any remote interface, the 8500A must also have an Interface Isolator, Option -08 (-08A with the 8502A), installed to provide for isolation between internal and external common ties. Once installed, the isolator can be used with any interface module.

PROGRAMMING

Program Sequence

When programming the 8500A series remotely, there is a sequence of commands that will determine the range, function, speed, etc., of the instrument. When power is applied or a reset character is transmitted, the instrument assumes a starting or "reset" condition. The "reset" condition is defined as follows:

RESET CONDITIONS

REMOTE CODE	CONDITION
V	Volts DC
R4	1000V Range
S7 (8502A)	
S5 (8500A)	2^5 or 2^7 Samples Per Reading
F0	Fast Filter, Timeout Disabled (Panel Indicator Off)
X0	External Reference/Scaling Disabled
P0	Offset Feature Disabled
U0	Limits-Peak Value Storage Disabled
T0	Single Reading Line Synchronous
B0	Single Character ASCII Format
D0	Front Panel Display Active
L0	Deactivate Local Lock Out
Y0	Echo Capability Disabled (Half-Duplex)
J0	Deactivate Line Feed Suppression
M0	Enable Cal Memory Factors
Q0	Disable External Trigger (8502A)
W	No Delay (8502A)

FUNCTION	STATE ASSUMED
Remote/Local	Local
Offset	Zeroed
V dc Zero	Zeroed (Retained if Cal Memory Option -04 Installed)
Ohms Zero	Zeroed (Retained if Cal Memory Option -04 Installed)
Cal Memory Factors	Retained (Applicable Only When Cal Memory Option -04 Installed)
8/16 Bit Mode	8 Bit (Applicable Only when Duplex Reg I/F Option -07 Installed)
Peak Values	Cleared
Limits Values	Zeroed
Ext. Ref/Scaling Values	1

General

The model 8500A/8502A, when equipped with any of the remote interface options, is programmed through a "command string" format. All characters transmitted to the 8500A/8502A via any of the remote interfaces (Bit Serial Asynchronous, IEEE-488 and Duplex Parallel) must be ASCII 7-bit upper case characters. A command

string is a sequence of 1 to 31 characters, consisting of one or more of the following character types: IMMEDIATE, COMMAND, and TERMINATION.

The 8500A may be placed in Remote Mode with BIT SERIAL (-06) or DUPLEX PARALLEL (-07), option, by toggling the front panel REMOTE pushbutton or by transmitting any character that the 8500A will recognize from the remote controlling terminal. With the IEEE option (-05), the 8500A/8502A will go into remote only when it receives a MLA (See Part 2). When in Remote Mode, the only front panel switch that is active is the REMOTE switch, providing that it is not locked out by the local lockout command.

IMMEDIATE CHARACTERS

There are five immediate characters so named since they cause an immediate action. An immediate character may be executed at any time and does not require a termination character.

* Reset

The immediate character "*" sets the 8500A Series to a "reset" condition as described in an earlier paragraph. When this command is issued, it must not be followed by any character for approximately 3 seconds; e.g., any carriage return and/or linefeed following the "*" must be suppressed. This is required because the microprocessor resets the remote interface as well as the instrument. During this period, the remote interface is unable to accept programming characters.

% Halt

The "%" character is used to halt a reading which is in progress; in particular if the instrument has been placed into the continuous reading mode, that mode will be terminated and the 8500A Series will wait for a command string. When the "%" character is received, the transmission of readings is terminated immediately even if a reading has not been completely transmitted. The following trigger mode transitions will occur:

If in continuous line synchronous — single reading line synchronous

If in continuyous asynchronous — single reading asynchronous

Go To Local — Lockout Remote

The "#" character will command the instrument to enter local mode of operation and lockout the remote interface. The remote mode can be reentered only after the front panel REMOTE button has been pushed. This command is for BIT SERIAL (-06) or DUPLEX PARALLEL (-07) interface only.

NOTE: The state of the 8500A when changing from remote to local operation will be modified as follows:

Ohms fast mode will be ignored

Scaling mode will not be in effect

If the high averaged sample rate was in effect, the sample rate will be set to 2^7 (i.e., 128 samples/reading)

The state of the 8500A/8502A when changing from local to remote operation will be modified as follows:

Ohms fast mode, scaling mode, and continuous mode will be resumed if the instrument was in that mode when it was placed into local.

High averaged sample rate will be reinstated if the instrument was in that mode when it was placed into local.

The last local error that occurred (if any), will be remembered and be available for recall by "getting" status.

! Hi-Speed Reading Mode

The "!" character is uded to enter the HI-SPEED reading mode. For the 8500A this mode is only available with the duplex parallel (-07) interface. For the 8502A this mode is available with the IEEE (-05) and duplex parallel (-07) interfaces. The "!" character triggers the first reading in the same way as a "?" (see later). Each successive "?" or TTL Trigger (8502A only) will trigger and transmit data in a three byte two's complement binary format. The three byte binary word is a voltage or current reading only. Appendix A contains a further discussion of the HI-SPEED Reading Mode.

/ 8/16 Bit Toggle

The "/" character is uded only with the Duplex Parallel Interface, Option -07. It is used to toggle from the 8-bit to the 16-bit mode, and vice versa. When the "/" character is used to toggle from one mode to another, the immediate and or termination character must be placed in the least significant byte (LSB) of the programming word. Refer to Appendix B for details.

TERMINATION CHARACTERS

Termination characters cause the execution of a command string. They are normally placed at the end of each programming statement.

$ Clear The Command String

The "$" character is used to erase an incorrect programming entry from the command string buffer. It deletes all characters issued back to, but not including, the predeeding termination character. A new command string is then needed to modify the state of the 8500A/8502A. This character is normally used only when operating with the bit serial interface, such as with a terminal.

, Execute The Command String

The "," character is used to cause the execution of the previous command string. It does not trigger a reading or produce an output from the 8500A Series; it puts the instrument in the defined state only.

When programming a string of characters, it is good practice to use the execute character "," at frequent intervals so that if an error is made, the string need only be cleared back to the last ",". They also are required if the command string is larger than 31 characters.

? Execute The Command String And Trigger

The "?" character will cause the execution of a previously entered command string (if any), take a reading and transmit that reading through the remote interface. If a command string was not entered immediately preceeding the "?" character, the 8500A/8502A will be in the last defined state and in that state take and transmit a reading.

Thus, a single "?" character will cause the 8500A series to trigger and transmit a reading just as if the "?" character is an immediate character.

One exception occurs when a command string containing a "get" specification has been entered; in that case, the 8500A/8502A will respond with the value or status that was requested by the command string and not take a new reading.

When issuing a program string terminated by a "?" character, the CR and/or LF delimiter characters normally output by a computer/controller should be suppressed.

If an error occurs during the reading, a single "0" followed by a (CR) will be transmitted. At that point status should be requested to determine the cause of the error.

@ Execute, Trigger, And Interrupt When Ready

The "@" character is used to cause the triggering of a reading and the generation of an interrupt when the reading is done.

The function of the "@" termination character is in all other respects similar to the "?" termination character.

The methods of providing an interrupt depends upon the interface being used; the bit serial and the duplex parallel interrupt by the transmission of a single (CR—; the IEEE-488 interface asserts a service request on the IEEE-488 bus.

With the IEEE-interface the "GET" Group Execute Trigger Bus command causes the instrument to respond as if it were programmed with the "@" character.

In order to obtain the reading that was generated by "@" termination character, a "get" command should be inserted in the following command string, terminated by a "?" character.

COMMAND CHARACTERS

The command characters can be divided into five groups:

Function
DC and AC Volts, DC and AC Amps, Ohms

Range
Discrete Range or Autorange

Modifiers
Sample Rate (samples/reading), Filter (slow, fast, bypass, time-out), Trigger (continuous, single, synchronous, asynchronous), Offset (offset on-off), External Reference (on-off scaling), Limits (on-off, peak value storage).

Control
Binary or ASCII Output, Display, On-Off, Local Lockout, Echo, Trigger Internal or External, Delay.

Memory
Value Stored For: VDC, Ohms, Offset, Ext Ref. Numeric Entry Upper and Lower Limits/Scaling Values Recalled For: Previous Reading, DC Zero, Status, Offset, Ext Ref, Upper Limit, Lower Limit, Lowest Value Found, Highest Value Found/Scaling.

FUNCTION COMMAND CHARACTERS

There are 7 function command characters: The following characters select the multimeter functions.

V — DC Volts
VA — AC Volts
C — DC Coupled AC Volts (-09 only)
I — DC Current
IA — AC Current
Z — Ohms
Z1 — Fast Ohms

When the function is changed, the state of the instrument is changed as follows:

Range
Auto

Modifiers
Unchanged except that the "Offset" is "off", limits is "off" and numeric values are lost for 8500A and not lost for 8502A.

Control
Unchanged

Memory
Unchanged

If an optional function is selected, the function of the instrument will be undefined and the error code will be set to 19.

Z1 Function Command Character

The "Z1" character string will place the 8500A/8502A into the ohms function and fast ohms mode. In normal ohms operation, the unknown resistor value Rx is determined by three measurements:

V^1-V^2 which is the voltage across an internal precision reference Rr and Vo which is the voltage across the unknown resistor Rx.

The value Rx is then computed by the application of Ohm's Law.

$Rx = Vo\ (Rr/(V^1-V^2))$

In the fast ohms mode, $Rr/(V^1-V^2)$ is stored and assumed to be constant until a function change, range change, or overrange condition occurs. The 8500A measures V^0 and multiplies by the constant $Rr/(V^1-V^2)$ to obtain the result Rx.

In the regular ohms mode, all voltages (V^0,V^1 and V^2) are measured to calculate Rx.

RANGE COMMAND CHARACTERS

There are eight range commands which will specify the following by function:

	V	VA or C	I	IA	Z, Z1
	DC VOLTS	AC VOLTS			OHMS
R	Auto	Auto	Auto	Auto	Auto
R0	312.5 mV	Auto	312.5 μA	312.5 μA	21.25Ω
R1	2.5V	2.5V	2.5 mA	2.5 mA	250Ω
R2	20V	20V	20 mA	20 mA	2 kΩ
R3	160V	160V	160 mA	160 mA	32 kΩ
R4	1280V	1280V	1.280A	1.280A	256 kΩ
R5	Auto	Auto	Auto	Auto	4.096 MΩ
R6	Auto	Auto	Auto	Auto	32.768 MΩ
R7	Auto	Auto	Auto	Auto	262.144 MΩ

NOTE: Values shown are full scale values for each function and range.

MODIFIED COMMAND CHARACTERS

There are 7 modifier command characters:

S – Sample Rate
F – Filter
T – Trigger
P – Offset
X – External Reference – Scaling
U – Limits-Peak Value Storage
H – Hi-Averaged Sample Rate

S or H Samples/Reading

The modifier command character "S" is followed by a digit (0 through 7) specifying the number of samples per readings as follows:

S0 – 2^0 = 1 Sample/Reading (4 MS)
S1 – 2^1 = 2 Samples/Reading (8 MS)
S2 – 2^2 = 4 Samples/Reading (17 MS)
S3 – 2^3 = 8 Samples/Reading (33 MS)
S4 – 2^4 = 16 Samples/Reading (67 MS)
S5 – 2^5 = 32 Samples/Reading (134 MS)
S6 – 2^6 = 64 Samples/Reading (267 MS)
S7 – 2^7 = 128 Samples/Reading (534 MS)

The modifier command character "H" is followed by a digit (0 through 9). The "H" modifier command character is an extension of the "S" modifier command character. The next higher rate above S7 is H0.

H0 – 2^8 = 256 Samples/Reading (1.1S)
H1 – 2^9 = 512 Samples/Reading (2.1S)
H2 – 2^{10} = 1,024 Samples/Reading (4.3S)
H3 – 2^{11} = 2,048 Samples/Reading (8.5S)
H4 – 2^{12} = 4,096 Samples/Reading (17.1S)
H5 – 2^{13} = 8,192 Samples/Reading (34.1S)
H6 – 2^{14} = 16,384 Samples/Reading (68.3S)
H7 – 2^{15} = 32,768 Samples/Reading (2 Min 17S)
H8 – 2^{16} = 65,536 Samples/Reading (4 Min 33S)
H9 – 2^{17} = 131,072 Samples/Reading (9 Min 6S)

NOTE: The times shown above are approximate digitizing times per reading for 60 Hz line synchronous operation with either dc volts, current, or ac volts functions programmed.

F Filter

The "F" character is used to specify the amount of filtering and whether a time-out for the filter settling is to be enabled. The time-out causes a delay between a trigger command received and the actual reading to be taken. In the continuous trigger modes, the time-out will occur before each reading is initiated. Since there are two filter bandwidth settings, there are two time-outs; one associated with slow filter (approximately 500 ms) and one associated with fast filter (approximately 50 ms).

The 8500A series recognizes the following "F" modifier command characters:

F – Slow, Filter, Time-Out Disabled
F0 – Fast Filter, Time-Out Disabled
F1 – Bypass Filter, Time-Out Disabled
F2 – Slow Filter, Time-Out (approximately 500 ms) Enabled
F3 – Fast Filter, Time-Out (approximately 50 ms) Enabled

T Trigger

The "T" character specifies the trigger mode of the instrument, it will select whether samples to be averaged for a reading are taken line synchronous (every 4 or 5 ms) or line asynchronous (approximately every 1.7 ms), and whether a single reading is to be taken or continuous readings.

T – Continuous Reading Mode/Line Synchronized
T0 – Single Reading Mode/Line Synchronized
T1 – Continuous Reading Mode/Line Asynchronous
T2 – Single Reading Mode/Line Asynchronous

Single reading mode requires one "?", "@", "GET" or TTL trigger per reading. Continuous reading mode requires only one "?", "@", "GET" or TTL trigger to start continuous readings. Each reading must be accepted by the controler (IEEE or Duplex Parallel interface) before the next reading can be completed. The "%" character is used to exit the continuous reading mode.

NOTE: When the asynchronous modes are selected, the display will be turned off in order to save time; the front panel switches with the display off are ignored.

P Offset

The "P" character specifies whether a reading is to have an offset value subtracted from it.

P – Offset Subtracted (ON)
P0 – Offset Not Subtracted (OFF)

The offset value may be stored either by entry from front panel, "Keeping" the previous reading as an offset or "Keeping" a numerically entered offset.

X External Reference – Scaling

The "X" character sets the external reference/scaling mode. This mode is valid for any function and any range. In this mode, all readings are divided either by the signed magnitude of the external reference voltage in volts or by a numerically entered scale factor or previously taken external reference voltage.

X – External Reference "On", Scaling "Off"
X0 – External Reference "Off", Scaling Mode "Off"
X1 – Scaling Mode "On", External Reference "Off"

The "X" external reference mode uses the external reference voltage Vxref as a dividing scale factor. Every reading cycle this voltage is measured and all readings are divided by this measured voltage.

Minimum Vxref = ± 0.0001V, or or V Input/ max. display within range Volts (8500A Only) or Input/10^9 (8502A only)

Maximum Vxref = ±40V between EXT Ref Hi and Low Terminals, providing neither terminal is greater than ±20V relative to the Sense Lo or Ohms Guard Terminals.

Reading = INPUT/Vxref

The "X1" scaling mode will divide all readings by a previously taken external reference voltage or by a previously entered numeric scale factor SF which has a range given by

Minimum SF = Same as Vxref minimum (10^{-9} for 8502A)
Maximum SF = ±100 (8500A) or a number such that INPUT/Max SF is less than 10^{-9} (8502A)
Reading = INPUT/SF

The "X" and "X1" modes are mutually exclusive; i.e., only one may be activated at any one time.

Note that in conjunction with the offset feature any linear transformation of the form

$$y = mx + b$$

can be programmed where "x" is the unscaled reading, "-b" is the stored offset, "m" is the stored value "1/SF" and "y" is the final displayed reading. The value "y" may be interpreted in any units appropriate to the user since the scaling factor may be constructed so as to give any desired units within the display limits of the 8500A.

Refer to Appendix C for a typical use of scaling.

U Limits - Peak Value Storage

The "U" character specifies whether a test for limits (or Peak Value Storage) is to be performed. In the limits "on" mode, each reading is compared to upper and lower limits which have been entered with a keep command (see section Memory "Keep" Characters.)

U – Limits Testing On (Values Must be Preset)
U0 – Disable Limits/Peak Value Storage
U1 – Save Highest and Lowest Values (Peak Values)

Previous higher and lower values are erased from memory whenever "U1" is programmed or is changed.

Limits may be stored by "Keeping" a numeric value as an upper or lower limit.

For 8500A limits and peak value storage are mutually exclusive, while for the 8502a they can both be used at the same time.

NOTE: Limit tests are applied after all other modifier modes such as scaling, offset, etc. have been applied.

LIMITS OUTPUT FORMAT

"0"	for reading between limits
"1"	for above upper limit
"-1"	for below lower limit
"2"	if an error occurs (such as overranging)

The total output format then is 3 or 4 ASCII characters.

SIGN	0/1/2	CR	LF

CONTROL COMMAND CHARACTERS

There are 6 control command characters:

B – Binary or ASCII Output Format
D – Display ON/OFF
L – Local Lockout
Y – Echo Characters
J – Inhibit (LF)
M – No cal adjustment

B Input/Output Format

The "B" character selects the binary or ASCII format.

B – Binary Format
B0 – ASCII Format
B1 – Binary 16 Bit Parallel (Duplex Register Only)
B2 – ASCII 16 Bit Parallel (Duplex Register Only)

The front panel display is turned on when the ASCII mode is entered, off when Binary mode is entered.

THE BINARY OUTPUT FORMAT:

The binary output format consists of five characters:

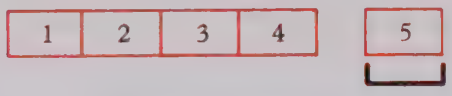

The implied binary point is between first and second character. The first four bytes contain a 32-bit binary two's complement fixed point number. The fixed binary point is located between the first and second bytes giving 8 bits as the integer portion and 24 bits of binary fraction. Because this format cannot be used to hold the entire range of possible values for the DMM, a fifth byte is used as an exponent. The exponent is an 8-bit two's complement binary number representing the decimal exponent of the 32-bit binary fixed point number contained in the lower 4 characters.

EXAMPLE:

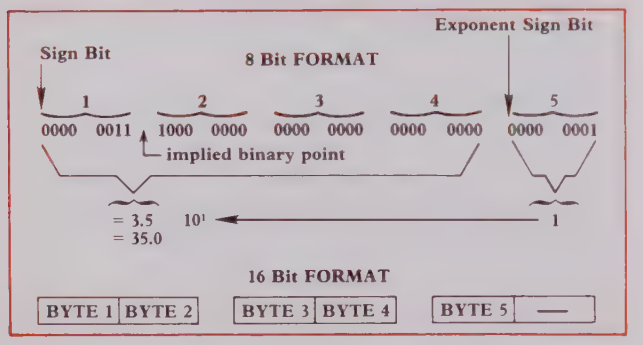

NOTE: In dc volts and ac volts, the exponent is always 1. In dc and ac current, the exponent is always -2. The exponent is range dependent in ohms function; i.e., 1 for Ω ranges, 4 for kΩ ranges, and 7 for MΩ ranges.

When in binary mode with limits testing activated the response is a single byte 8 bit binary two's complement number.

Errors are indicated by 4 bytes of "0" with a "0" exponent byte.

THE ASCII DATA OUTPUT FORMAT

The ASCII data format consist of 14 characters:

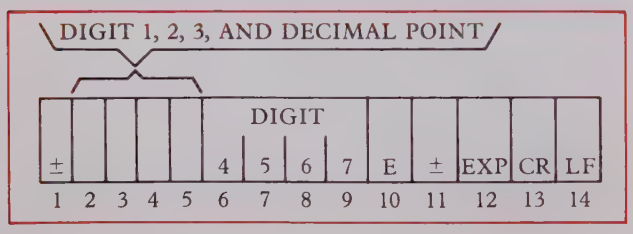

The seventh digit in the ASCII format corresponds to the "Cal" or HI RES digit of the front panel display. In some ranges and functions (e.g., 100 mV dc) this digit is permanently zeroed since it exceeds the resolution of the 8500A/8502A. (When not in the "Cal" "HI RES" mode, the front panel will display the value of the reading rounded to 6 significant digits.)

D Display Control and L Local Lockout

The "D" command turns the display on or off. With the display off, the 8500A series is no longer interrogating any of the front panel switches; so turning the display off causes a local lockout condition.

D – Display Off
D0 – Display On
L – Local Lockout On
L0 – Local Lockout Off

Y Echo Control

The "Y" character will cause the 8500A to either commence or terminate echoing of characters. (Applicable only with bit serial interface, Option -06.)

Y – Echo On (Full-Duplex)
Y0 – Echo Off (Half-Duplex)

J Line Feed Control

The "J" character suppresses the (LF) sent out at the end of a response line. "J0" is the default mode. The "J1" characters suppress all output from the 8500A/8502A. In single trigger mode of operation the instrument will not output any reading in this mode. In continuous mode of operation the instrument will take continuous readings and not output any of them. This mode (J1) is useful for Peak Value Storage operation (see "U" commands). It is necessary to use "J" or "J0" to exit this mode when Peak Values or any measurement is to be outputed.

J – < CR >
J0 – < CR > <LF >
J1 – Suppress all output

M Calibration Constant

The "M" character inhibits the adjustment of readings by the calibration memory correction factor. This will slightly increase the speed of readings. It has no effect if calibration memory Option -04 is not installed.

M – Cal Constant not applied
M0 – Cal constant applied

Trigger Command Characters

This set of command characters are available for the 8502A equipped with option -08A.

Q – External Trigger
W – External Trigger Delay

Q External Trigger

The "Q" character selects internal or external trigger format.

Q — Extend trigger to initiate reading and then

interrupt when ready

Q0 – Internal trigger to initiate reading with the external trigger input ignored.

Q1 – External Trigger to initiate the reading and then transmit.

When in the external trigger mode a "?" input will also initiate a reading.

W External Trigger Delay

The "W" command selects the amount of delay between the trigger signal and initiation of the reading.

W – No delay
W0 – 2.083 mS
W1 – 4.166 mS
W2 – 8.332 mS
W3 – 16.66 mS
W4 – 33.33 mS
W5 – 66.66 mS
W6 – 133.3 mS
W7 – 266.6 mS
W8 – 533.2 mS
W9 – 1.066 mS
W10 – 2.133 mS
W11 – 4.266 S
W12 – 8.532 S
W13 – 17.06 S
W14 – 34.13 S
W15 – 68.26 S

MEMORY COMMAND CHARACTERS

There are two forms of memory control:

Store into Memory: Keep;
The "K" character will specify the storing of a reading or numeric entry.

Recall from Memory: Get:
The "G" character specifies that a reading, numeric entry or status is to be read from the 8500A memory.

The "?" termination character is used to generate any GET response.

K "Keep" Command Characters

The following memory "Keep" commands are recognized by the 8500A:

K – Keep Last Reading as Offset
K0 – Keep Last Voltage Taken as V DC Zero*
K1 – Keep Last Reading as Ohms Zero*
DNP – Keep Numeric Value Following as Offset
KNX – Keep Numeric Value Following as Scaling Factor
KNU – Keep Numeric Value Following as Upper Limit
KNL – Keep Numeric Value Following as Lower Limit

* *May only be performed on lowest range (RO)*

NUMERIC ENTRY FORMAT

Offsets, Scaling Factors, Upper and Lower Limits may be entered via the "KN" command characters followed one of the modifier characters "P", "X", "U" or "L" and the numeric value which is an ASCII string of numeric characters, and optional sign, decimal point and signed decimal exponent digit in "E" notation.

Examples of legal numeric strings are:

"KNP 10"
Keep numeric offset of 10.0

"KNX 10.3E-1"
Keep numeric scaling factor of 10.3×10^{1} or 1.03

"KNU 7.6E4"
Keep numeric upper limit of 7.6×10^{4} (only valid in Ohms)

"KNL-123.456
Keep numeric lower limit of -123.4567

Some illegal strings are:

"KNP 1.2E9"
Exceeds numeric limits of all functions

"KNX 2.0E-13"
Exponent is limited to one signed integer digit, in this case the exponent would be -1 and the "3" would be ignored.

G "Get" Command Characters

G – Get Previous Reading and send on next Trigger
G0 – Get DC Zero and send on next Trigger
G1 – Get Status and send on next Trigger (see status format next paragraph)
GNP – Get Offset and send on next Trigger
GNR – Get External Reference factor and send on next Trigger (8502A only)
GNX – Get External Reference/Scaling factor and send on next Trigger (8500A only) or get Scaling factor (8502A only)
GNU – Get Upper Limit and send on next Trigger
GNL – Get Lower Limit and send on next Trigger
GNQ – Get Lowest Value Found and send on next Trigger
GNW – Get Highest Value Found and send on next Trigger

NOTE: The "Get" commands must never be followed by a trigger character "?".

Status Format

Status information from the 8500A/8502A may be obtained in the following format with memory command character "G1".

Characters 1 and 2 of the status information contain error code:

00 – No Error
06 – System Error
07 – Illegal Numeric Entry

08 – Remote Command String Error
09 – Remote Overrange
10 – V DC Zero/Ohms Zero Error
11 – Offset Error
12 – Filter Module Faulty or not installed
13 – DC Amp Module Faulty or not installed
14 – Excessive voltage present at terminals for Ohms/Current Measurement
15 – Fast A/D Converter Faulty or not installed
16 – Numeric Display Overflow
17 – Magnitude of External Reference Input >20V
18 – Controller Module Faulty
19 – Function Module selected not installed

NOTE: The least significant digit of the error code is displayed on the 8500A/8502A front panel; error codes with a first digit of zero are related to remote operation only.

Character 3 of the status information contains the range information.

Character 4 of the status information contains the sample rate (2y) low sample rate only.

Character 5 of the status information contains the function code:

0 – DC Volts
1 – AC Volts
2 – DC Amps
3 – AC Amps
4 – Ohms
5 – DC Coupled AC
7 – Function Not Defined

Concluding: Status format is as follows:

CHARACTERS

1	2	3	4	5	(CR)	(LF)
Error Codes		Range Codes	Sample Rate	Function	Carriage Return	Line Feed

Example Command Strings

The following is an example of different command strings and an explanation.

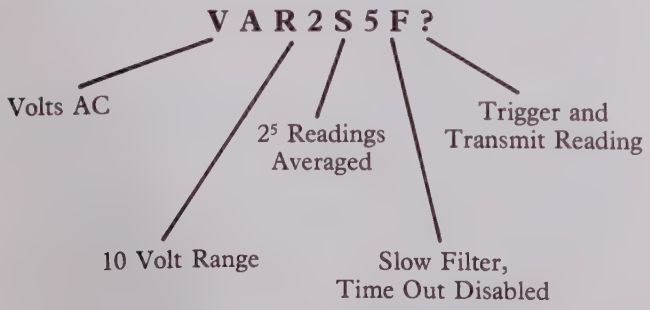

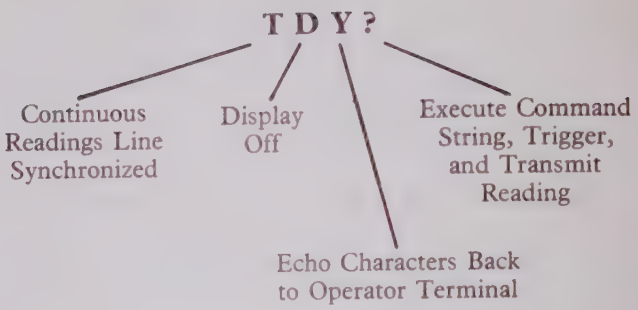

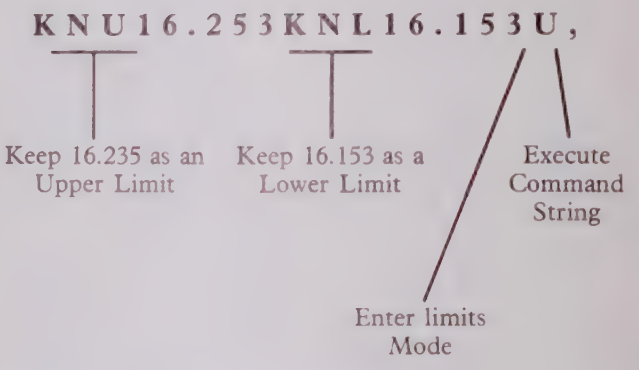

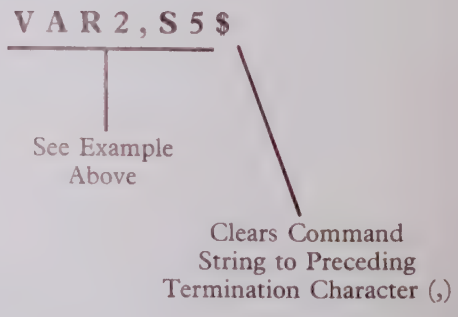

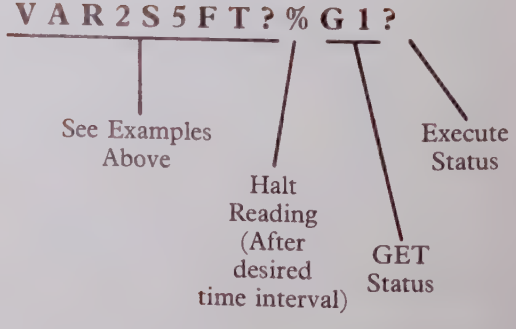

INTERFACING THE FLUKE MODEL 8500A SERIES USING THE IEEE-488 INTERFACE

PART 2

INTRODUCTION

This application bulletin outlines the use of the Model 8500A/8502A when equipped with Option 8500A-05 IEEE Standard Interface. The user must also refer to Part 1, "Remote Programming the Model 8500A/8502A," which provides detailed programming information regardless of the type of interface used. Note the Model 8500A/8502A may also be equipped with a Bit Serial Interface, Option 8500A-07. Refer to Part 3 and Part 4, respectively.

INTERFACE DESCRIPTION

Option 8500A-05, IEEE-488 Interface

The IEEE interface provides input/output compatibility per the IEEE-488-1975 Standard Specifications. This is also known (not necessarily correctly) as the ASCII BUS, HPIB, GPIB, or the IEC BUS. Rather than go into a detailed discussion of the standard, the reader is referred to Fluke AB # 36 or the actual publication (IEEE Std 488-1975) "IEEE Standard Digital Interface for Programmable Instrumentation," published by:

> The Institute of Electrical and Electronic Engineers, Inc. 345 East 47th Street; New York, N.Y. 10017

The interface is designed to be remotely controlled by a large variety of program sources such as a computer or system controller. Up to 15 IEEE Standard instruments or devices may be interconnected as a system. Some typical controllers are:

> Data General Models, 5280AR and 5702I
> DEC Model IBV11-A
> Tektronix 4051 Graphic System
> H-P 9800 Series Calculators
> H-P 2100 Series Computer
> Keithley System One with 7802-ISB Card
> Compucorp Model 425-IS Calculator
> WANG 2200 Series Systems

System Connection

Connection to the system is made with an IEEE Standard 24 pin cable. Cable lengths of 1, 2, and 4 meters are available from Fluke (P/N's Y8001, Y8002, Y8003, respectively). The maximum length of cable that can be used to connect a group or devices is: 2 meters times the number of devices within the bus system, or 20 meters, whichever is less. Cables may be interconnected in any manner deemed suitable by the user (that is, star linear, or combinations thereof). The connector (J3) on the Option -05 interface is accessible through a hole in the rear panel of the Model 8500A/8502A (Figure 1).

Each cable in the chain is alike the every instrument connects to all 24 lines in parallel (see Figure 2). Sixteen of the lines are signal lines, the remaining are logic common, signal returns, and a shield. The 16 signal lines are separated into 8 data lines, 3 data byte transfer (handshake) lines, and 5 general interface management lines. The data lines normally carry ASCII control characters and data. The transfer is asynchronous, controlled by the handshake lines, thus speed varies according to the speed of the sender and receiver.

As shown in Figure 2, a system consists of devices connected to a bus, which can perform the following status designations.

Controller
A device which assigns who is going to transmit data (talker) and who will receive data (listener) There may be only one controller and it will service all interrupts. A controller may also be a talker or listener type device.

Talker
A device that will output data to the bus upon command. There may be only one talker assigned or addressed at any one time.

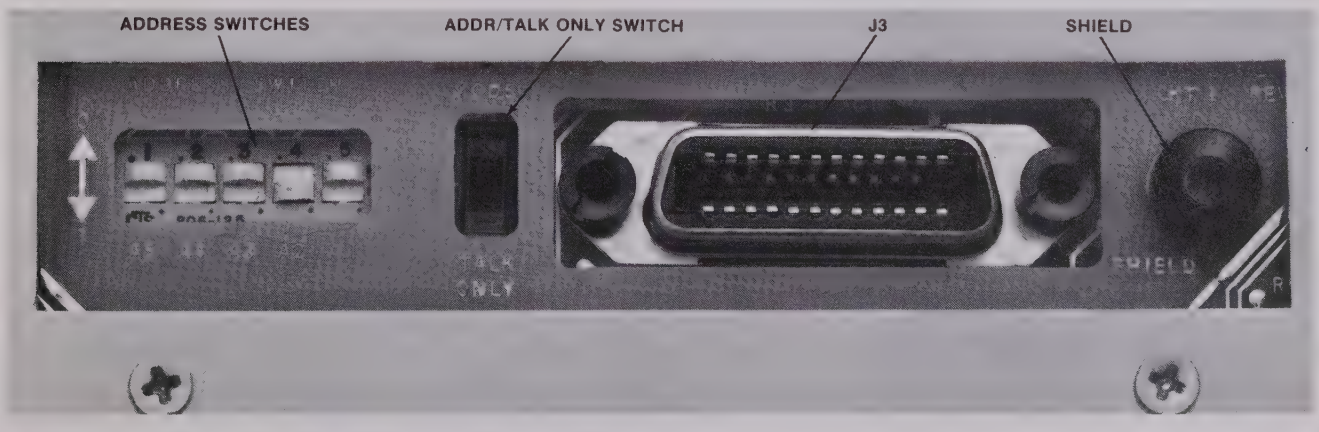

Figure 1. CONNECTOR VIEW IEEE-488 INTERFACE, OPTION -05

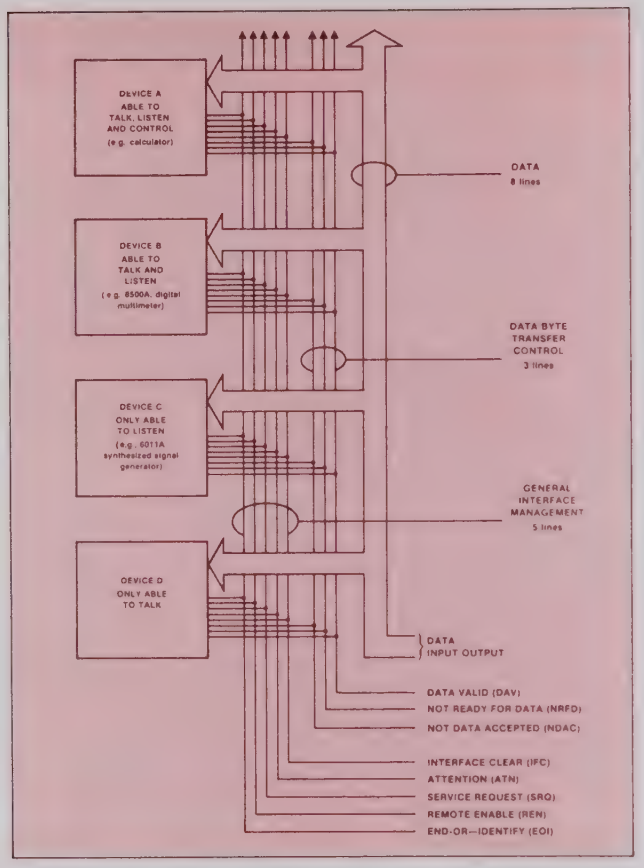

Figure 2. IEEE BUS CONFIGURATION

Listener
A device that accepts bus data upon being properly addressed. There may be up to 14 listeners taking part in any simultaneous bus operation.

Since the Option 8500A-05 is part of a digital multimeter, it has the capability of being addressed as a talker or listener. A device need not be a talker or listener at all times. It may be idle. Any device not address is in an idle state, and therefore has no effect on data communications rates.

Address Switches A1-A5 (Rear Panel)

The position of these switches determines the listen/talk address of the interface. The specific address used is determined by the user. Use a small tool, such as a screwdriver to set the switches. Depressing the switch toggle at the bottom indent sets that particular address bit TRUE. The listen and talk addresses are set in pairs according to Table 1.

ADDR/TALK SWITCH (See Figure 1)

This 2 position switch has 2 functions:

1. When placed in TALK ONLY position the instrument is constantly a talker and will output data whenever a listener on the bus requests it. The 8500A remains in local mode; therefore, function, range, etc. must be setup on the front panel. Operation in this mode does not require a controller. A typical minimum system may consist of an 8500A and a printer, for semi-automatic data logging.

2. Full flexibility and power of the 8500A/8502A using the Option -05 IEEE interface becomes more apparent when connected to a controller. When a controller is used the switch is set to ADDRESSABLE MODE position, enabling address switches A1 through A5. The instrument then becomes fully remote programmable.

Interface Function Repertoire

This interface incorporates the IEEE-488 functions (reference IEEE-Std-488-1975, paragraph 2.1.2.3, page 13) normally found in a programmable measurement instrument. Following is a list of the functions included.

Symbol	Function	Comments
AH1	Acceptor Handshake	Complete capabilities
L4	Listener	This is basic listener and unaddress if MTA, does not include listen only capabilities.
LE1	Extended Listener	No capabilities
SH1	Source Handshake	Complete capabilities
T5	Talker	Complete capabilities
TE0	Extended Talker	No capabilities
SR1	Service Request	Complete capabilities
RL2	Remote/Local	No local lockout (can be RL1 with local lockout implemented in software)
DC1	Device Clear	Complete capabilities
DT1	Device Trigger	Complete capabilities
CO	System Controller	No capabilities

Table 1. ADDRESS CODING

ASCII Character		Binary					Decimal Equivalent
Listen Address	Talk Address	Address Switches A5	A4	A3	A2	A1	
(SPACE)	@	0	0	0	0	0	0
!	A	0	0	0	0	1	1
"	B	0	0	0	1	0	2
#	C	0	0	0	1	1	3
$	D	0	0	1	0	0	4
%	E	0	0	1	0	1	5
&	F	0	0	1	1	0	6
'	G	0	0	1	1	1	7
(	H	0	1	0	0	0	8
)	I	0	1	0	0	1	9
*	J	0	1	0	1	0	10
+	K	0	1	0	1	1	11
, comma	L	0	1	1	0	0	12
-	M	0	1	1	0	1	13
.	N	0	1	1	1	0	14
/	O	0	1	1	1	1	15

**Depressing address switches A1-A5 at the bottom sets that particular bit TRUE. (1 = TRUE, 0 = FALSE)*

Table 1. ADDRESS CODING CONT.

ASCII Character		Binary					Decimal Equivalent
Listen Address	Talk Address	Address Switches A5	A4	A3	A2	A1	
0	P	1	0	0	0	0	16
1	Q	1	0	0	0	1	17
2	R	1	0	0	1	0	18
3	S	1	0	0	1	1	19
4	T	1	0	1	0	0	20
5	U	1	0	1	0	1	21
6	V	1	0	1	1	0	22
7	W	1	0	1	1	1	23
8	X	1	1	0	0	0	24
9	Y	1	1	0	0	1	25
:	Z	1	1	0	1	0	26
;	[	1	1	0	1	1	27
<	\	1	1	1	0	0	28
=	]	1	1	1	0	1	29
>	↑	1	1	1	1	0	30

**Depressing address switches A1-A5 at the bottom sets that particular bit TRUE. (1 = TRUE, 0 = FALSE)*

Interface Messages

The interface will handshake all messages on the IEEE bus; however, only the ones listed in Table 2 will have an effect on the interface, instrument, or both.

SERVICE REQUEST OPERATION

The service request function allows the interface to get the attention of the controller at any time by asserting the SRQ line. The controller then does a serial poll of the instruments to determine which one is requesting service. The Model 8500A will only issue a service request when it is programmed with the command terminator; -@-" or triggered by the Group Execute trigger (GET) command. The SRQ is issued each time a measurement is completed. The status response of the Model 8500A when serially polled by the IEEE controller is as follows:

	ASCII	OCTAL
SRQ Asserted by 8500A	@	100
SRQ Not Asserted by 8500A	<	074

Whenever the Model 8500A, equipped with option -05 is triggered by the IEEE Group Execute Trigger (GET) command, the instrument will perform as if it was a "@" command.

SAMPLE PROGRAMS FOR TEKTRONIX 4051

The program is written in Tektronix 4051 BASIC language. When operating with other controllers, the appropriate language must be used.

The program is an example of using several features of the Model 8500A series. Namely: scaling, offsets and limits testing. Refer to Appendix C for a detailed description.

Table 2.

MNEMONICS	MESSAGE	MESSAGE CODING BINARY								Octal	Hex	U	A	L	N
MLA	My Listen Address	■	0	1	A5	A4	A3	A2	A1				X	X	1
MTA	My Talk Address	■	1	0	A5	A4	A3	A2	A1				X	X	2
UNL	Unlisten	■	0	1	1	1	1	1	1	077	3F	X			
UNT	Untalk	■	1	0	1	1	1	1	1	137	5F	X		X	
OTA	Other Talk Address	■	■	■	■	■	■	■	■					X	3
SPE	Serial Poll Enable	■	0	0	1	1	0	0	0	030	18	X		X	
SPD	Serial Poll Disable	■	0	0	1	1	0	0	1	031	19	X		X	
LLO	Local Lockout	■	0	0	1	0	0	0	1	021	11	X		X	
GTL	Go To Local	■	0	0	0	0	0	0	1	001	01		X		
DCL	Device Clear	■	0	0	1	0	1	0	0	024	14	X			
SDC	Selected Device Clear	■	0	0	0	0	1	0	0	004	04		X		
GET	Group Execute Trigger	■	0	0	0	1	0	0	0	010	08		X		

0 = FALSE

1= TRUE

■ = *Don't Care*

U = Universal Command

A = Addressed Command

L = Messages that affect the interface or instrument while in local

N1 = Receiving MLA will address the interface as a listener and place the interface and instrument into remote

N2 = The address switches A1 through A5 determine the first five bits of the listen and talk addresses

N3 = OTA is any talk address other than MTA

As shown in the program, the IEEE Interface, Option -05 is addressed to a decimal 2, which corresponds to a listen address of " " " and a talk address of "B". When using the Tektronix 4051, the line feed suppression should be activated by programming code "J". This inhibits the line feed character at the end of an 8500A response. One other point in the program is that when the "*" is used to reset the 8500A, notice that the carrige return and the line feed are suppressed from the Tektronix 4051 by programming a semicolon ";" at the end of the print statement. This is mandatory since the asterisk is an immediate character which causes the 8500A to be reset. During a short interval, the interface is not ready to accept data from the controller.

This problem determines the error in percent of a batch of 47 ohm, 5% resistors.

```
1    INIT
10   REMARK THIS PROGRAM USES
     SCALING, OFFSET AND ULTIMATES
15   REMARK THE 8500A IS ADDRESSED TO
     DECIMAL 2
20   PAGE
100  PRINT @ 2: "*";
105  GOSUB300
110  PRINT @ 2: "ZR1J," (programs 100Ω range and
     line feed suppression)
115  PRINT @ 2: "KNP100," (program offset of 100)
120  PRINT @ 2: "KNX.47," (programs scaling factor of
     0.47)
125  PRINT @ 2: "KNU5," (Programs upper limit of 5%)
130  PRINT @ 2: "KNL-5," (Programs lower limit of 5%)
135  PRINT @ 2: "X1P," (Activates scaling and offsets)
140  PRINT @ 2: "?"; (Triggers measurement)
145  INPUT @ 2: V (Places error in % in variable V)
150  PRINT @ 2: "U," (Activates ultimates testing)
155  PRINT @ 2: "?"; (Performs limits test)
160  INPUT @ 2: L (Places limits response in variable L)
165  PRINT @ 2: "U0," (Disables ultimates testing)
170  LET J= L + 2
175  GOSUB J OF 400, 410, 420, 430
200  PRINT "ERROR IN % ="; V A$
205  GOSUB300
210  GOTO140
300  PRINT "CONNECT RESISTOR TO BE
     TESTED"
305  PRINT
310  PRINT "ENTER 'CR' TO CONTINUE";
315  INPUT B$
320  RETURN
400  LET A$ = "FAIL LO"
405  RETURN
410  LET A$ = "PASS"
415  RETURN
420  LET A$ = "SYSTEM ERROR"
435  RETURN
```

FOR HP 9825A CALCULATOR

This program logs the peak values. The 8500A/8502A is placed in continuous mode and triggered by a Group Execute Trigger (GET) command. This causes the 8500A/8502A to set the SRQ flag upon completion of each measurement. After 500 readings taken the instrument is halted and the peak values are retrieved, then printed. Notice that the 8500A/8502A is programmed with a Write Byte statement. That is done in order to suppress the CR, LF characters. This could have been accomplished by using a format statement which suppresses the CR, LF characters, then writing the formatted statement to the 8500A/8502A. In order for this program to operate, the 8500A/8502A must be addressed to a decimal 2, or statement number 0 must be changed to agree with the 8500A address.

```
0:  dev 'dvm', 70 Assigns device 'dvm' to bus address
                  decimal 2
1:  clr 'dvm';    resets 'dvm' and waits 2 seconds
    wait 2000
2:  flt 6         sets floating point format
3:  prt "8502A",
    "Peak
    Voltage"
4:  wtb 'dvm',    programs "dvm" to Vdc, 2 samples/
                  reading
    "VS2U1T,"     Peak Value Storage and continuous
                  readings
5:  trg "dvm"     trigger "dvm" (GET)
6:  for I = 1 to
    500
7:  rds ("dvm")   clears SRQ
      A
8:  if bit (t, rds waits until SRQ assented
    7)) = 0; gto 8
9:  next I
10: wtb "dvm",    stops "dvm" and recalls lowest
    "GNQ?"        value
11: red "dvm",V
    prt "Lowest
    value", V
12: wtb "dvm",    recalls highest value found
    "GNW?"
13: red "dvm"
    V; prt "Highest
    value", V
14: lcl "dvm"     puts "dvm" in local
```

This program is more complicated than the previous 9825A program. The 8502A (only) is used in the Hi Speed reading mode as described in Appendix A. In order for this program to operate, the 8502 must be addressed to a decimal 2 or statement number 3 must be changed.

```
1: "8502A HI-
   SPEED":
2: "8502A ADR
   2":
3: 702  D; fxd 6 assigns D to bus address 2
4: clr D         clears 8502A
5: spc 5; prt
   "8502A Hi-
   Speed ","
   reading
   mode"
6: spc 2; prt
   "Connect
   stimulus",
   "between",
```

```
    "0 & 2.5
    VDC"
 7: dsp "Press
    CONTINUE
    ;stp
 8: spc 1; dsp
    "1000 read-
    ings being
    taken"
 9: dim F$[3014]
    N[5]
10: buf "data",  set up data buffer for the 1000
    F$,3         readings
11: wtb D,       programs 8502A to VDC, Slow Filter,
    "FVR1S       1V range hi Speed reading mode
    0T0!"
12: tfr D, "data"reads the first reading
    ,3
13: if rds ("data waits for the buffer to be ready for next
    ")=1; jmp 0  reading
14: for I=1 to
    999
15: wtb D, "?"; Triggers and reads next reading
    tfr D,"data" 3
16: if rds ("datawaits for the buffer
    ")=1; fto 16
17: next I
18: lcl D; wtb D,clears 8502A
    "*"
19: spc 1; prt
    "All 1000"
    "," readings
    are ","
    displayed"
20: for I=0 to
    999 by 3
21: for J=1 to 3  converts each reading into 3 bytes of
                  numerical data
22: num(F$[I+
    J])  N[J]
23: next J
24: N[1]*10/2 4  First byte is modified for implied
    V            decimal
25: N[2]*10/2 12 Second byte is modified for implied
    +V   W       decimal point and added to first byte
26: N[3]*10/2 20 Third byte is modified for implied
    +V   W       decimal point and added to other bytes.
27: V/8 V;dsp V;Reader is scaled by range factor and
    wait 200     displayed.
```

INTERFACING THE FLUKE MODEL 8500A/8502A USING THE BIT SERIAL INTERFACE

PART 3

INTRODUCTION

This application bulletin outlines the use of the Model 8500A/8502A when equipped with Option -06, Bit Serial Interface. The user must also refer to Part 1, "Remote Programming the Model 8500A/8502A," which provides detailed programming information regardless of the type of interface used. Note the Model 8500A Series may also be equipped with an IEEE-488 Standard Interface, Option 8500A-05, or Duplex Register Parallel Interface, Option 8500A-07. Refer to Part 2 and Part 4, respectively.

INTERFACE DESCRIPTION

Option 8500-06 Bit Serial Interface

The bit serial asynchronous interface provides either voltage loop (EIA Standard RS-232B or C) or current loop (20 mA) level signals for interfacing to such devices as computers, CRT displays, DEC writers, teletypes, etc. Thirteen baud rates are available from 50 to 9600, either one or two stop bits may be set. Selection is made via rear panel logic switches. Forty readings per second are possible with ASCII coding.

Installation

The interface is installed by removing the top cover of the Model 8500A/8502A and merely plugging the module into the rear slot of the instrument.

NOTE: Isolator option 8500A-08 or 8502A-08A must be installed in place of the jumper pcb when using this interface. The isolator module serially isolates the analog signal processing and conversion from the digital processing, control, display and remote input/output. The maximum allowable difference from guard to logic common is 1000 volts.

Signal Selection

Switches S1 and S2 select the type of signal that the interface will communicate with. Either 20 mA current loop or EIA Standard RS-232B or C voltage loop levels. The switches are located adjacent to the input/output connector J1 (Figure 3), their settings must match the type of terminal to which the interface is connected. See Table 4 for switch settings.

Data Transfer Rates

Baud rates of 50, 75, 110,134.5, 150, 200, 300, 600, 1200, 1800, 2400, 4800, and 9600 are selectable by logic switches S4 through S7 (Figure 3). The baud rate must be the same as that of the terminal in use. Refer to Table 4 when setting the baud rate switches.

Table 3.

SW	ON	OFF
S1	20 mA	RS-232
S2	RS-232B	RS-232C
S3	1 Stop Bit	2 Stop Bits
S8	Odd Parity	Even Parity

1 = ON 0 = OFF	50	75	110	134.5	150	200	300	600	1200	1800	2400	4800	9600
S4	1	1	0	1	0	1	0	1	0	0	0	0	0
S5	1	1	0	0	0	0	0	0	1	1	0	1	1
S6	0	0	0	1	0	1	1	0	0	0	1	1	1
S7	1	0	0	1	1	0	0	1	0	1	1	0	1

Data Format

In order to provide for a more flexible interface option, three jumpers and a switch are used to select the bits/character and parity generation. When the interface is shipped from the factory, the data format is 8 bits/character, no parity. If desired, the interface may be reconfigured by addition of jumpers, located on the interface module adjacent to the switches S1-S8 on the rear panel.

The number of bits/character are selected by jumpers JP1 and JP2 according to the table below:

BITS	JP1	JP2	1 = Jumper Installed
5	1	1	
6	0	1	
7	1	0	
8	0	0	

Jumper JP3 selects Parity Generation:

JP3 installed = Parity
JP3 removed = No Parity

Switch S8 is used to select even or odd parity:

S8 on = ODD
S8 off = EVEN

NOTE: As stated above the data format when shipped from the factory is 8 bits/character. Most terminals will accept either 7 or 8 bits/character; however, when parity is selected the bits/character is normally set to 7. If this is done, it will not be possible to select binary output format on the Model 8500A since the binary output is an 8 bit byte format; however, many terminals allow 8 bits/character and parity.

Earlier versions of option 8500A-06 were manufactured without jumpers JP1, JP2, and JP3. Switch S8 was installed, but not connected. On these versions, the data format is selectable as well; however, it is accomplished in a different manner. These boards are hard wired for 8 bits/character, no parity generation. To reconfigure, it is necessary to make simple land pattern cuts. These land patterns are located adjacent to the UART 1C, (U9) and include pins 35, 37, 38 and 39. These pins come factory wired to +5V dc. To modify the format, land patterns may be cut and then jumpered to logic common (see Figure 4) according to the charts below. Prior to adding any jumpers to logic common, ensure that the land pattern has been opened between the pin and +5 V dc to prevent a power supply short.

1 = 5 VDC 0 = LOGIC COMMON		No. of Data Bits
U9 Pin No.	Function	8 7 6 5
38	NB1	1 0 1 0
37	NB2	1 1 0 1

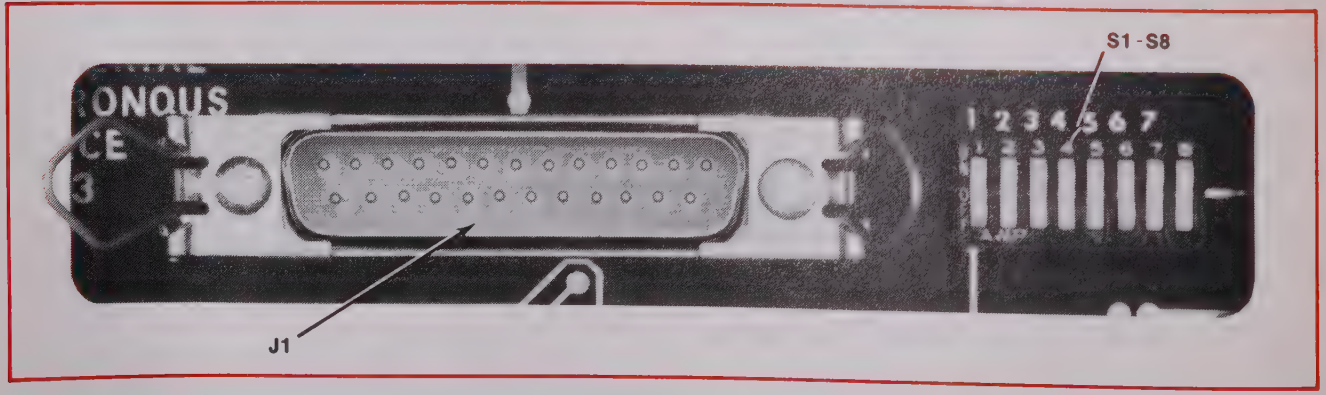

Figure 3. CONNECTOR VIEW BIT SERIAL INTERFACE, OPTION -06

1 = 5 VDC 0 = LOGIC COMMON		Type of Parity		
U9 Pin No.	Function	None	Even	Odd
39	EPS	1 0	1	0
35	NP	1 1	0	0

Current Loop Connection

Refer to Figure 5 for 20 mA current loop input/output pin assignments. When connecting to a 20 mA current device note that the 20 mA current sources are provided with this interface, and are inseparable from it. Be certain that sending and receiving circuits to which this interface is connected do not have any other 20 mA current sources. Disconnect any external current sources.

Voltage Level Connection

Because the Bit Serial Interface, Option 8500A-06, is an RS-232C type Z asynchronous interface, only three signal lines are applicable when interfacing to an EIA level RS-232C terminal or controler. They are as follows:

Signal	J1 Pin
Transmitted Data	2
Received Data	3
Signal Ground	7

Option 8500A-06 interface is furnished with a 25 pin female connector, type DB25S (Fluke P N 312579) and connector hood (Fluke P N 320184). A cable is required between the Model 8500A and terminal. If a prewired cable is used a null modem may be implemented. Figure 6 depicts the option 8500A-06 and terminal signal lines that must be connected.

In addition to pins 2, 3, and 7 being connected as shown, the connections depicted by dotted lines may or may not be required by the terminal. Some typical terminals and their conection requirements are shown in Table 5.

NOTE: The terminal used with the option 8500A-06 must use upper case characters. If a mechanical type terminal is used such as a teletyper or T1 at 300 baud or less, the stop bit selector switch S3 should be set for 2 stop bits.

Table 4.

Manufacturer	Model	Jumper Pins
DEC	DL11 VT15 VT50 VT55	None Required
Fluke	1300A	8-20
Micon	KDM-1	None Required
TEC	MINI-TEC	4-5
Texas Inst.	Silent 700	5-6-8-20

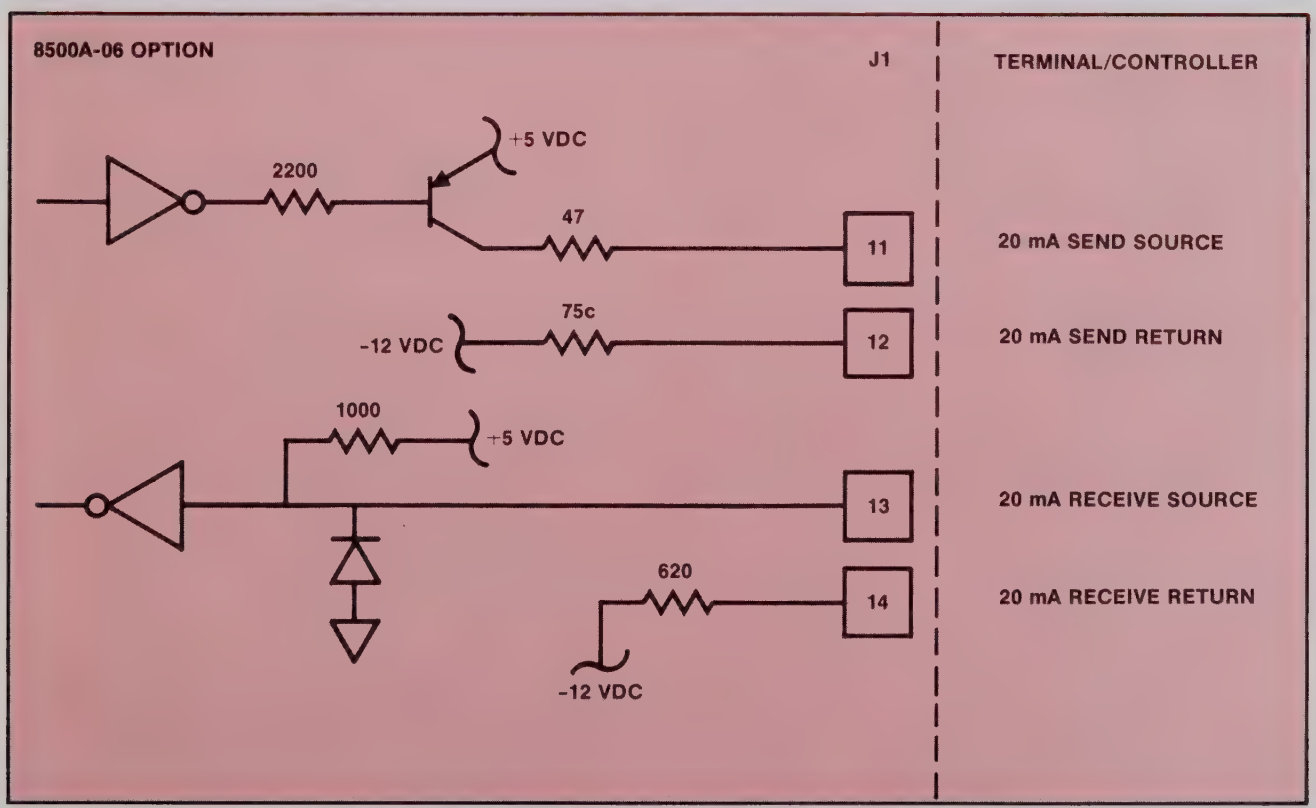

Figure 5. 20 mA CURRENT LOOP CONNECTION

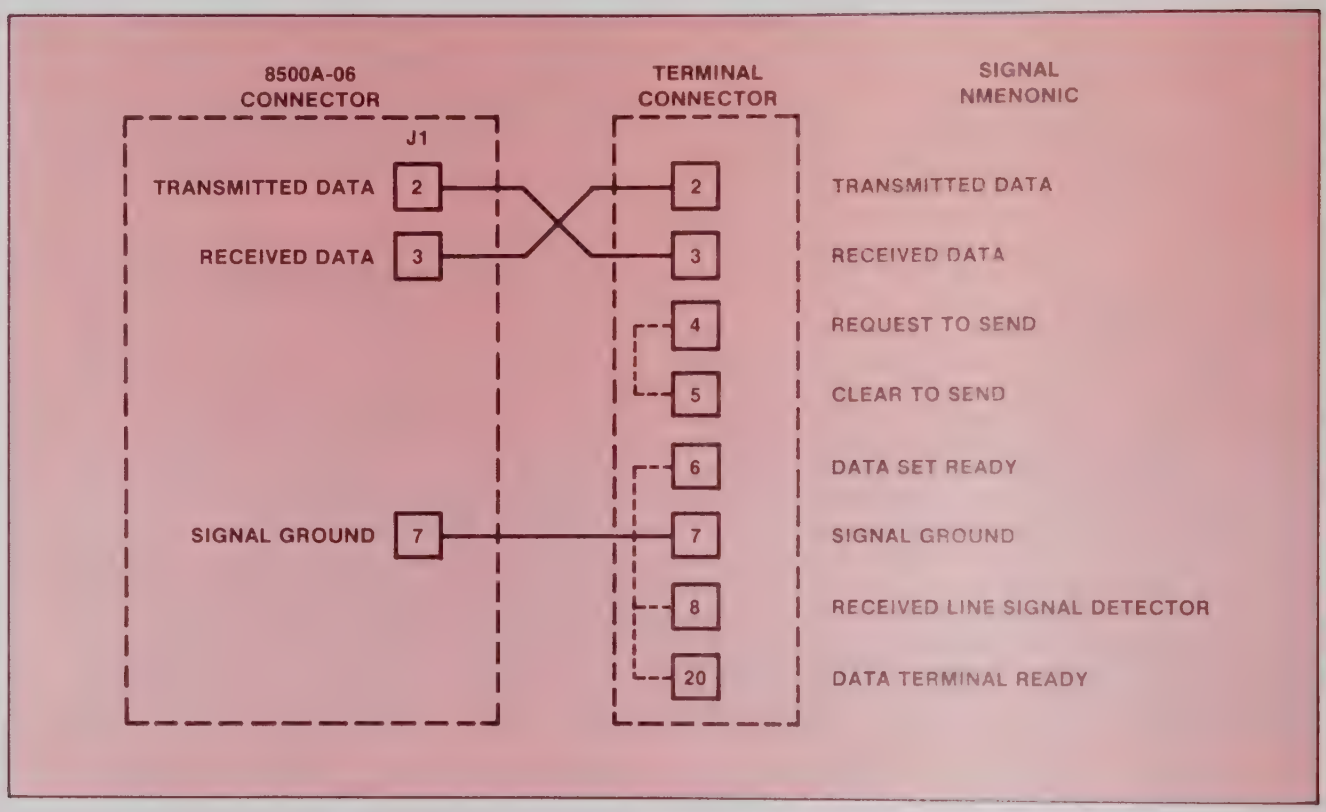

Figure 6. EIA LEVEL CONNECTIONS

INTERFACING THE FLUKE 8500A/8502A USING THE PARALLEL INTERFACE

PART 4

-07, PARALLEL INTERFACE

The Parallel Interface is offered to allow the 8500A/8502A to be interfaced to minicomputer peripheral interfaces, and microcomputer or controller interfaces. Interfacing to a wide variety of these devices is accomplished via a plug-in header called a "personality card". This personality card can be tailored by defining the pins to perform control of the 8500A/8502A through the external device. The -07 provides two ready lines, CIR and COR, and two strobe lines, CIS and COS, that can be wired at either positive true (+5V) or negative true (0V) TTL levels.

The data lines can be grouped into 8 and 16 bit configurations depending upon the width of the external device. Input to the parallel is ASCII only in one or two characters per transfer. The output of the parallel interface can either be ASCII or Binary (2's complement) and can be selected via command codes.

The normal power-up condition of the parallel is eight bit ASCII input and output. Command codes can change this to 16 bit ASCII input (two characters/transfer), 16 bit ASCII output, eight bit Binary output or 16 bit Binary output.

On the 8500, when the front panel remote button is pushed, the unit stops to stimulate it. When the front panel button is pushed on the 8502, the -07 tries to output data (ASCII 8 bit) in a continuous talk only mode (see Case 1 example).

The -07 makes the 8500/8502 very versatile, not only to many types of available computer peripheral interfaces such as the DEC-DRILL and HP-μCKT card, but also for user designed custom interfaces for mini and micro-computers (see case 2).

When creating a personality card, it is first essential to know the external device, and second, understand the -07 connections. A partial schematic and a pin description is provided along with cases to further help in understanding the -07 personality card.

Personality Card Description

Pin #	Mnemonic	Definition
1	COS-B	Data Output Strobe Buffered
2	COS-B	Data Output Strobe Buffered Inverted
3	COS	Data Output Strobe

Description - These pins allow either polarity of strobe from external device to read data from DVM. The trailing edge of these are used to reset the output ready (COR) and tell the DVM Controller to load new data for the external device.

Pin #	Mnemonic	Definition
4	OR 2_A	OR GATE 2 input A
5	OR 2_B	OR GATE 2 input B
6	OR 2_{Output}	OR GATE 2 output
8	COEN	Control Output Enable
9	DOEN	Data Output Enable

Description (Pins 4, 5, 6) - These pins allow two signals to be OR'd (+ true) or AND'd (− true) for combination of signals for control purposes.

Description (Pins 8, 9) - These pins are used to control when data is output to the external device. They can be controlled by data ready (COR), the data out strobe (COS), or tied to ground for data out always enabled. Valid enable for data out is Low (0V). In the 16 bit mode COEN is used for the low order eight bits and DOEN for the high order 8 bits. In 8 bit mode only COEN need be used.

Pin #	Mnemonic	Definition
11	ILAT	Input MSB Latch
12	SLAT	Input LSB Latch

Description - These pins are used to latch data into the -07. Both pins 11 and 12 are used in 16 bit input mode with ILAT being the high order, 8 bits on SLAT being the low order 8 bits. Only SLAT is used in the 8 bit input mode. Data is latched on a negative to positive transition.

Pin #	Mnemonic	Definition
10	OSLE	Output Strobe Latch Enable
16	DLR	Data Output Latch Reset
17	CLR	Control Output Latch Reset

Description - These pins are used to reset the COR output after output data has been read. Resetting the COR allows new data to be loaded. Resetting requires OSLE High and either DLR or CLR High, then either one going low (0V) resets the COR F/F.

Pin #	Mnemonic	Definition
13	ISLE	Input Strobe Latch Enable
14	ILS	Data Input Latch Strobe
15	SLS	Control Input Latch Strobe

Description - These pins are used to control the CIR line for timing of inputting data to the -07. ILS and SLS resets the CIR F/F in the same way as the above COR F/F.

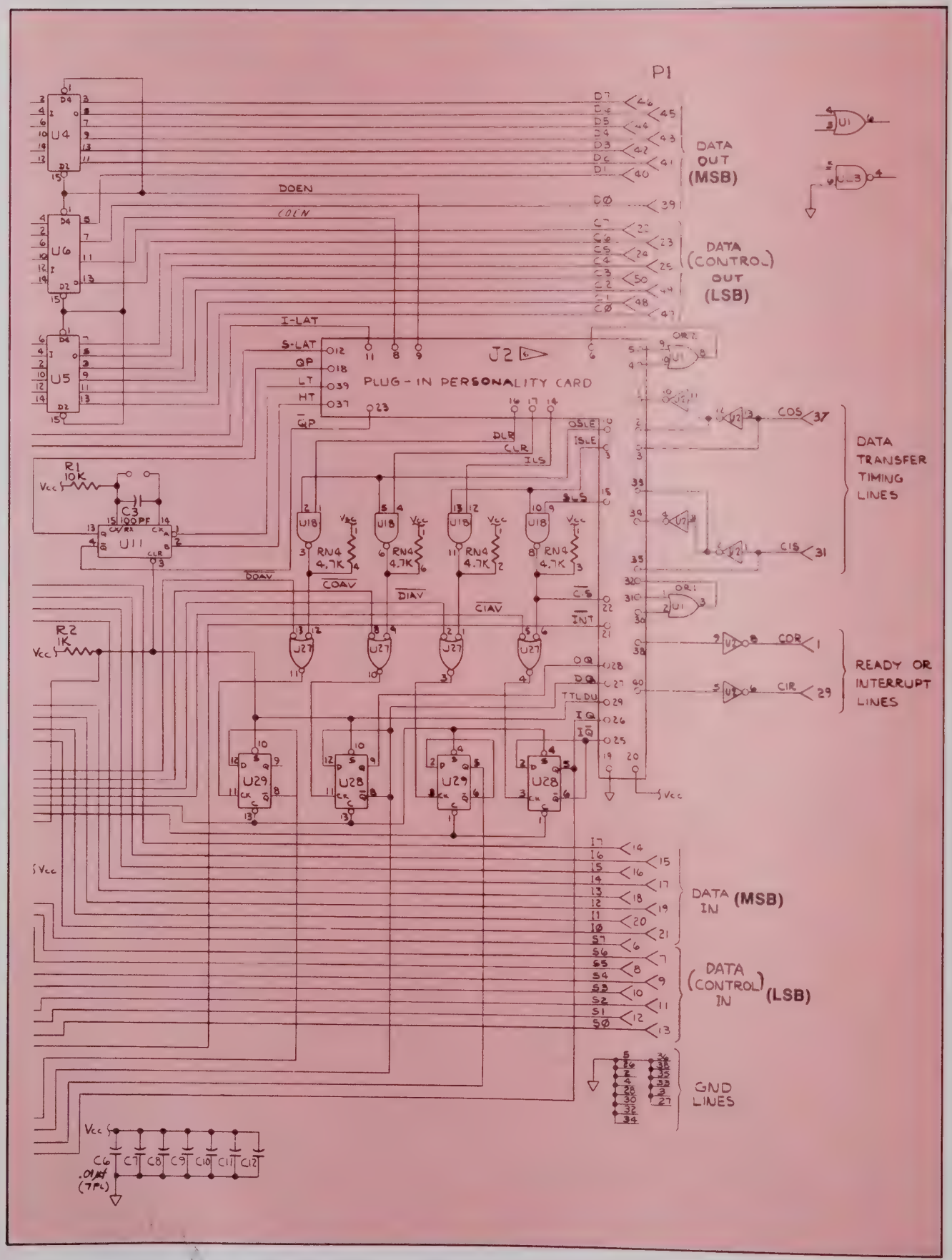

PARALLEL INTERFACE (MIS-1171)

Pin #	Mnemonics	Definition
18	QP	High Delay Pulse
23	$\overline{QP}$	Low Delay Pulse

Description - These pins are outputs from the delay one shot for extending short pulses or deskewing data. Length can be varied by addition of extra capacitor on U11 across C3. Loaded delay ≈ 600 nS.

Pin #	Mnemonics	Definition
19	GND	Ground
20	Vcc	+5V
29	TTL PU	TTL Pullup
21	INT	Interrupt Clock

Definition - Pin 19, used to tie Inputs Low; Pin 20 used to tie CMOS Inputs High; Pin 29 used to tie TTL Inputs High; Pin 21 provides the interrupt to the DVM controller to input data and requires a negative going pulse of at least 600 ns in duration.

Pin #	Mnemonics	Definition
22	CIS	Clock Input Strobe Inverted

Description - Provides a negative going pulse the width of the external devices data input strobe (CIS). if the pulse is greater than 600 ns this pin is normally connected to INT.

Pin #	Mnemonics	Definition
25	$\overline{IQ}$	Data Input Ready Low
26	IQ	Data Input Ready High

Description - These pins provide either polarity of ready signal to an external device for outputting data to the -07 and are normally connected to pin 40 (CIR) only. On Power UP IQ is high until DVM ready to take data then IQ goes low.

Pin #	Mnemonics	Definition
27	$\overline{DQ}$	Data Output Ready Low
28	DQ	Data Output Ready High

Description - These pins provide either polarity of ready signal to an external device for inputting data from the -07 and are normally connected to pin 38 (COR) only. DQ goes high when a byte of data is ready for the external device to read.

Pin #	Mnemonics	Definition
30	ORA1A	OR gate 1 input A
31	ORA1B	OR gate 1 input B
32	ORA1out	OR gate 1 output
33	CIS B	Control Input Strobe Buffered Inverted
34	CIS B	Control Input Strobe Buffered
35	CIS	Control input Strobe
37	HT	Delay Trigger High
39	LT	Delay Trigger Low

Description (Pins 30, 31, 32) - These pins allow two signals to be OR'd (+ true) or AND'd (− true) for combination of signals for control purposes.

Description (Pins 33, 34, 35) - These pins provide for either polarity of strobe for inputting data to the -07 and giving control of input latches, input ready resets, and DVM interrupt.

Description (Pins 37, 39) - These pins provide either high or low trigger for the delay one shot to generated QP and $\overline{QP}$ pulses. If the low trigger input (39) is used then (37) must be tied high to TTL pu (29). When high trigger (37) is used as the one shot input, then (39) must be tied to ground (19).

Pin #	Mnemonics	Definition
38	COR	Control Output Ready Inverted
40	CIR	Control Input Ready Inverted

Description - These are used to generate the input (CIR) and output (COR) ready lines.

Prewired Personality Cards

The following are the types of personality cards offered for specific interfaces. Also there is an -07D which allows wiring personality card to custom uses.

-07A FOR DEC DR11C

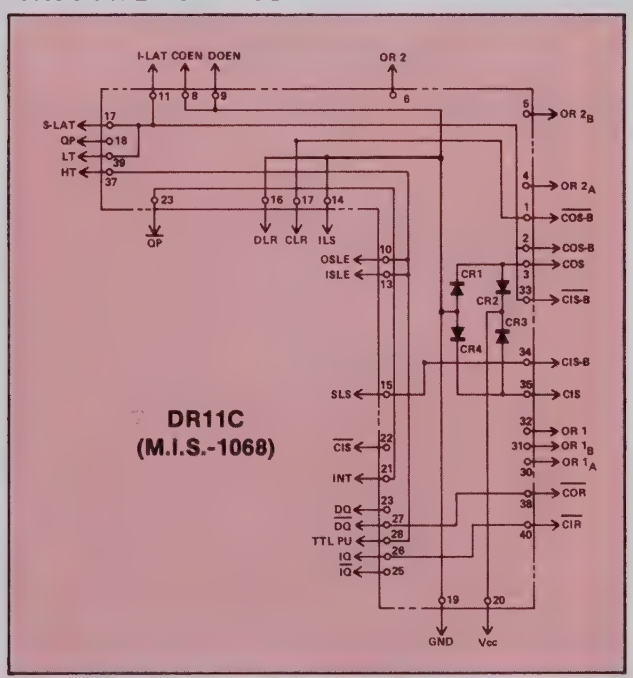

Interface Cable:

-07 Input Signal	Pin #	Pin #	DR11C Output Signal
CIS	31	VV	New Data Ready
CIR	29	LL	Request A
I7	14	JJ	DATOT15
I6	15	HH	DATOT14
I5	16	FF	DATOT13
I4	17	BB	DATOT12

I3	18	AA	DATOT11
I2	19	Z	DATOT10
I1	20	X	DATOT9
I0	21	W	DATOT8
S7	6	T	DATOT7
S6	7	R	DATOT6
S5	8	N	DATOT5
S4	9	L	DATOT4
S3	10	U	DATOT3
S2	11	NN	DATOT2
S1	12	K	DATOT1
S0	13	C	DATOT0
GND	32	UU	GND
GND	30	KK	GND
GND	28	MM	GND
GND	26	Y	GND

Signal	Pin #	Signal	Pin #
COS	37	C	Data Transmitted
COR	1	S	Request B
D7	46	M	Data in 15
D6	45	N	14
D5	44	P	13
D4	43	U	12
D3	42	V	11
D2	41	W	10
D1	40	Y	9
D0	39	Z	8
C7	22	CC	7
C6	23	EE	6
C5	24	HH	5
C4	25	KK	4
C3	50	BB	3
C2	49	H	2
C1	48	LL	1
C0	47	TT	0
GND	2	R	GND
GND	38	T	GND
GND	37	UU	GND
GND	4	SS	GND

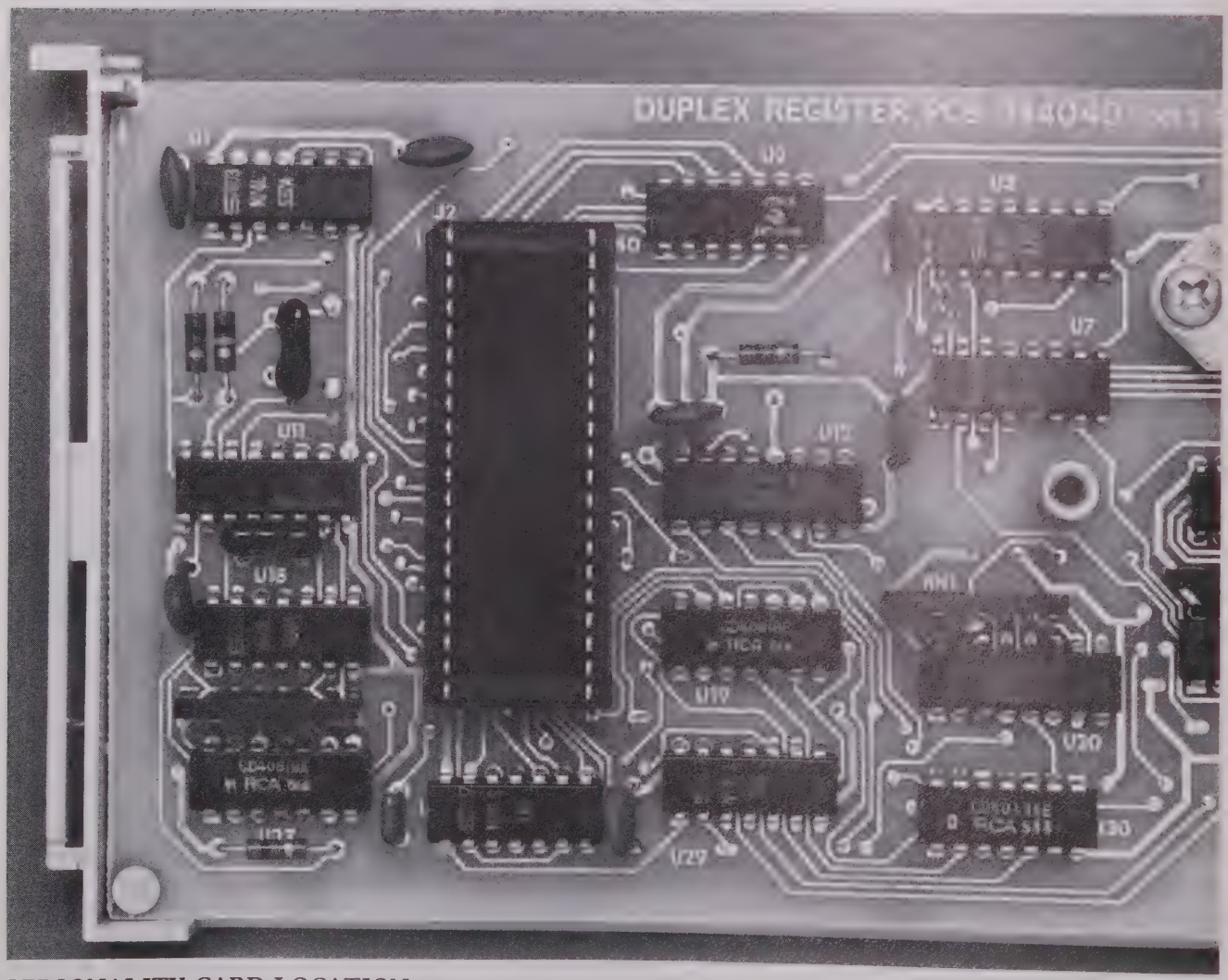

PERSONALITY CARD LOCATION

The following is an example of reading speeds attained using a DEC mini and the 8500A/8502A with a -07A Interface.

Sample Rate (SO) – Auto Range – 1V Input-
Line Feed Suppressed (J)
Readings/sec – LSI11-DRV11 Interface

	LINE SYNC	LINE ASYNC	HI-SPEED	Trigger to First Byte of Data					
BITS	8 16	8 16	8 16	ASCII	Sync	—	8	—	16
							22 ms	—	22 ms
					Async	—	8	—	16
							14 ms	—	15 ms
ASCII	40 40	60 55	— —	Binary	Sync	—	8	—	16
							7 ms	—	11 ms
					Async	—	8	—	16
							5.5 ms	—	6.5 ms
Binary	115 75	150 115	575 600		Hi-Speed	—	8	—	16
							1.4 ms	—	1.4 ms

-07B FOR DEC PC11

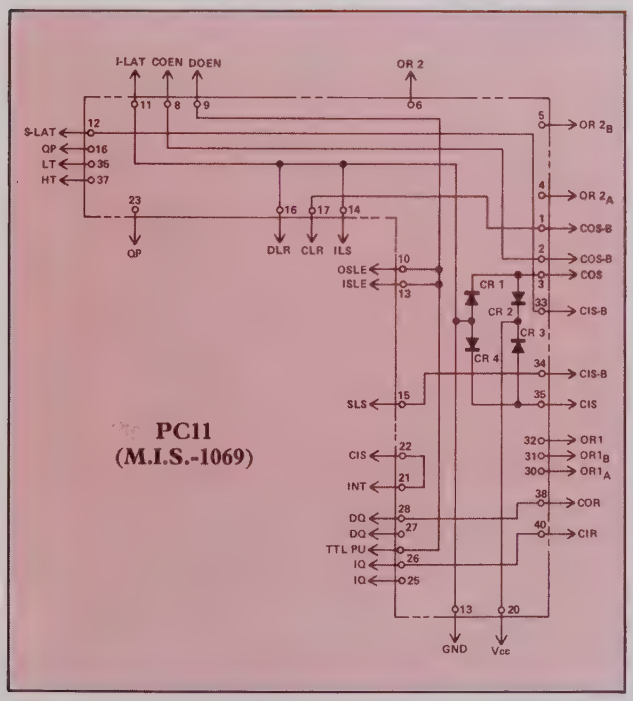

Interface Cable:

-07 Input		Punch Output	
Signal	**Pin #**	**Pin #**	**Signal**
CIR	31H2	I0P4	
S7	6	M2	AC4
S6	7	P2	AC5
S5	8	S2	AC6
S4	9	T2	AC7
S3	10	V2	AC8
S2	11	S1	AC9
S1	12	P1	AC10
S0	13	M1	AC11
GND	28	K2	GND

-07 Output		Reader Input	
Signal	**Pin #**	**Pin #**	**Signal**
COR	1	E1	I/O Bus INT L
COS	37	K2	I/O P2
C7	22	M2	I/O Bus 04L
C6	23	P2	I/O Bus 05L
C5	24	S2	I/O Bus 06L
C4	25	T2	I/O Bus 07L
C3	50	V2	I/O Bus 08L
C2	49	S1	I/O Bus 09L
C1	48	P1	I/O Bus 10L
C0	47	M1	I/O Bus 11L
GND	2	D2	GND
GND	36	H1	Rdr OUT tape H

07H = For HP 21MX with 12566 μCKT I/O Card, 9830 with 11202A I/F, or 9825 with 98032A Interface

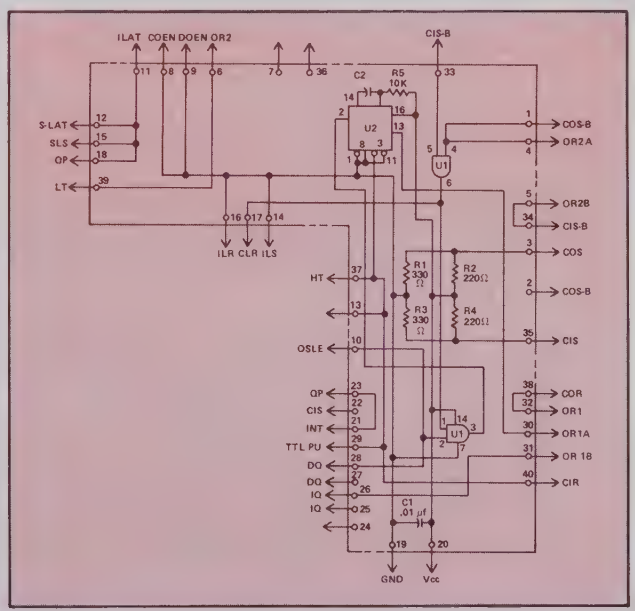

Interface Card:

-07 Output-Pin # varies by interface card on HP end

Signal	Pin #	Signal
CIS	31	Device Command or CTL
COS	37	Bit 15*
I6	15	Bit 14
I5	16	Bit 13

** Control Bit on 21MX - I/O Bit on 9830-9825 to I7. COS to I/O on 9830-9825*

I4	17	Bit 12
I3	18	Bit 11
I2	19	Bit 10
I1	20	Bit 9
I0	21	Bit 8
S7	6	Bit 7
S6	7	Bit 6
S5	8	Bit 5
S4	9	Bit 4
S3	10	Bit 3
S2	11	Bit 2
S1	12	Bit 1
S0	13	Bit 0
GND	30,32, 36,38	GND

COR	1	Input Device Flag or FLG
D7	46	Bit 15
D6	45	Bit 14
D5	44	Bit 13
D4	43	Bit 12
D3	42	Bit 11
D2	41	Bit 10
D1	40	Bit 9
D0	39	Bit 8
C7	22	Bit 7
C6	23	Bit 6
C5	24	Bit 5
C4	25	Bit 4
C3	50	Bit 3
C2	49	Bit 2
C1	48	Bit 1
C0	47	Bit 0
GND		
2,3,4,5		
24		
GND		

Interface Examples for -07 Personality Cards

The following cases are presented to better illustrate the versatility of the -07 to meet interface requirements and provide a step-by-step look into creating a personality card for a given I/O.

CASE 1

Need interface to a 9 track Magnetic Tape Unit to provide hard-copy data for further data reduction. The Tape Unit has the following criteria for interfacing:

Inputs =	Write Data Strobe =	minimum pulse < 2 μsec Data written 0.5 μsec after leading edge negative true.
	Data In =	D0 - D7
Outputs =	Write Ready Status =	Unit ready for taking data negative true
	Memory Busy =	Memory full-cannot take more data-negative true
Analysis of Tape Unit =		Before sending data to the tape unit Write Ready Status must be true (low) and Memory Busy must be false (high). When data is available from -07 interface, a Write Data Strobe must be issued at greater than 2 μsec.
Analysis of -07 =	Data Output Only =	Talk Only Mode of 8502A used. Not available on 8500A.

The -07 has two inputs (CIS and COS) and two outputs (CIR and COR). To output data to the Tape Unit, the Write Ready Status must be low and the Memory Busy must be high.

INPUT-OUTPUT CABLE CONNECTIONS

Tape Unit	8500A-07
Write Ready Status	CIS
Memory Busy	COS
Write Data Strobe	COR
D0	C0
D1	C1
D2	C2
D3	C3
D4	C4
D5	C5
D6	C6
D7	C7

To generate Write Data Strobe (COR), the following conditions must be met:

Memory Busy	False	High	COS
Write Ready Status	True	Low	CIS
Data Available (-07)	True	Low	DQ

Therefore: $COS \cdot \overline{CIS} \cdot \overline{DQ} = \overline{COR}$

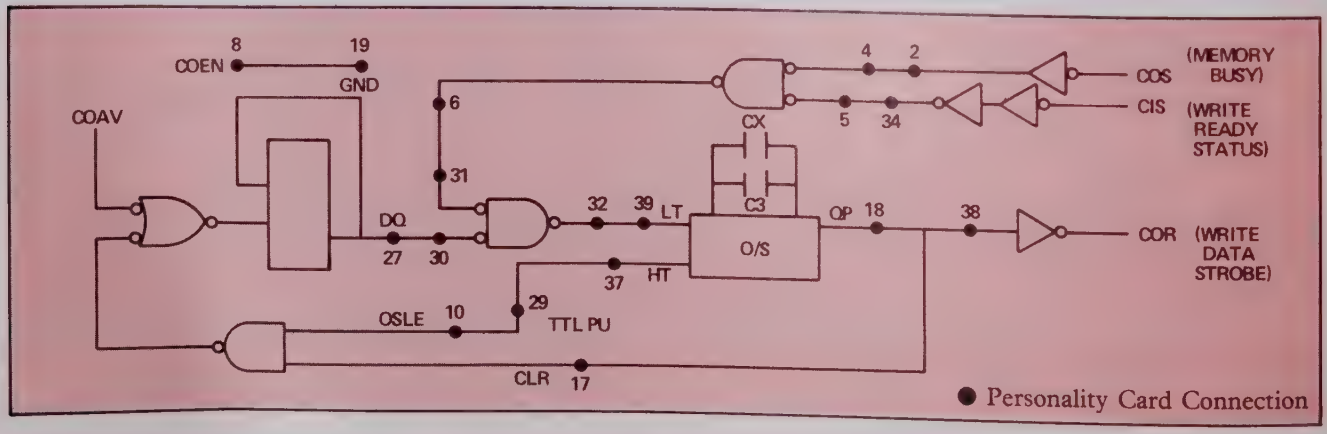

Since Write Data Strobe ($\overline{COR}$) must be greater than 2 μsec. One shot U11 (74LS123) is used with a value selected for Cx of worst case > 2 μsec (Cx≥600 pf). COEN (8) is grounded since data doesn't need strobing out.

By selecting Talk Only (pushing the Remote button) on the 8502A, as long as Memory Busy (COS) is false (high) and Write Ready Status (CIS) is true (low) the -07 will output ASCII data to the Mag Tape Unit.

CASE 2

To add the -07 8500A/8502A DVM to a Microprocessor Bus.

This requires a piece of external hardware but because of the -07, the I/O becomes relatively simple.

The μPU generates a READ and a WRITE whenever the Bus is being used. The μPU has the capability of 64K of memory but only 32K will be used. Thus the high order address bit A15 can be used for memory mapped I/O. Whenever A15 is active, data is being transferred to a peripheral hooked to the eight bit μPU Bus.

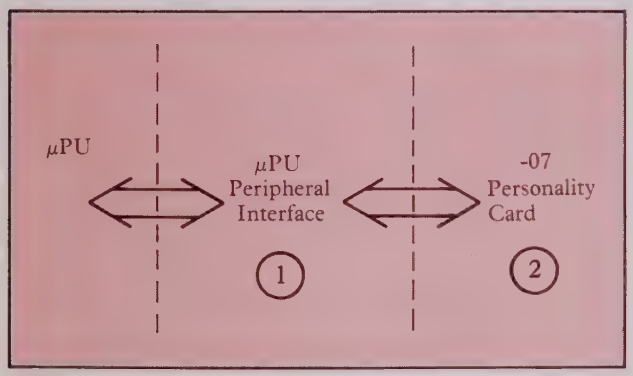

Items 1 and 2 must be done to interface the μPU to the DVM. Item 1 can be done first because of the flexibility of inputs to the -07. The following is just one of many examples for a peripheral interface.

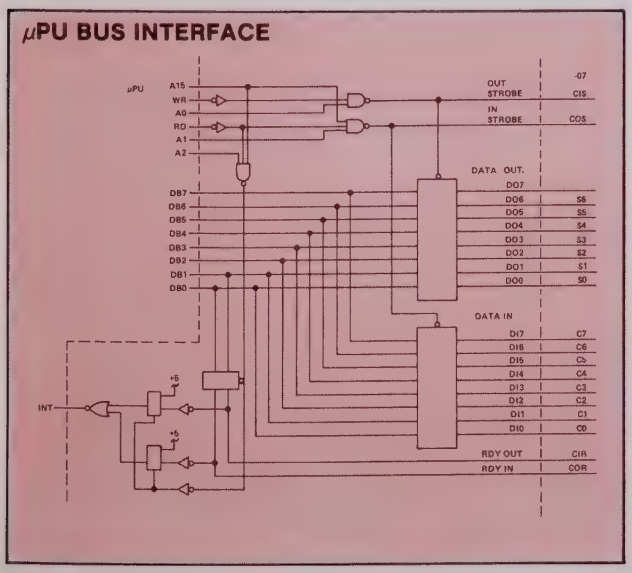

The hook-ups to the -07 would be as follows

CABLE:

OUTSTROBE	CIS (must be greater than 1 μs)
OUTPUT READY	CIR
IN STROBE	COS
INPUT READY	COR
DO7-DO0	S7-S0
DI7-DI0	C7-C0

OUTSTROBE is a pulse ≥ 1 μsec of negative (true) duration. The -07 must latch the data before the OUTSTROBE goes back high. To accomplish this the one shot is used with 500 ns pulse to load data.

Personality Card Jumpers

34 to 39	=	For trigger input generate DATA LATCH
37 to 29	=	Pull up
23 to 12	=	Latch data
33 to 15	=	Reset Ready Out
13 to 29	=	Pull up
22 to 21	=	Interrupt DVM
14 to 19	=	Pull down
11 to 19	=	Pull down
25 to 40	=	Generates CIR so new data can be input to DVM

The above connections take care of inputting data into the DVM. For the DVM to output data, the following connections must be made.

28 to 38	=	Generates COR telling μPU data available
2 to 17	=	Reset COR
8 to 19	=	Output data always enabled
10 to 29	=	Pull up
16 to 19	=	Pull down

This now allows the μPU to provide stimulus to the DVM and for the DVM to respond with measurement data as called out by the μPU.

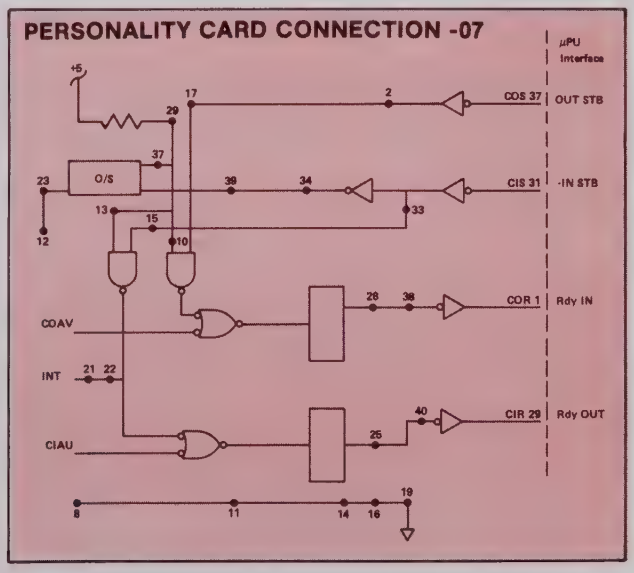

PART 5

CONVERSION RATE PARAMETERS:

1. Analog settling time, t_{AS}
2. Trigger processing time, t_P
3. A/D Conversion time, t_{AD}
4. Numeric modifications and conversions time, t_N
5. Output reading time, t_O

Each of the above parameters will be discussed separately and example calculations will be given for several of the more common modes of system usage.

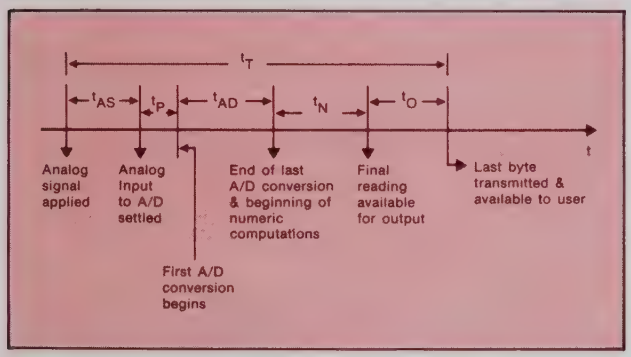

The total time t_T is the time to setup a reading, measure it, and output the reading. The reading speed is then given by $1/t_T$ in readings/sec.

$t_T = t_{AS} + t_{AD} + t_N + t_O$

ANALOG SETTLING TIME, t_{AS}

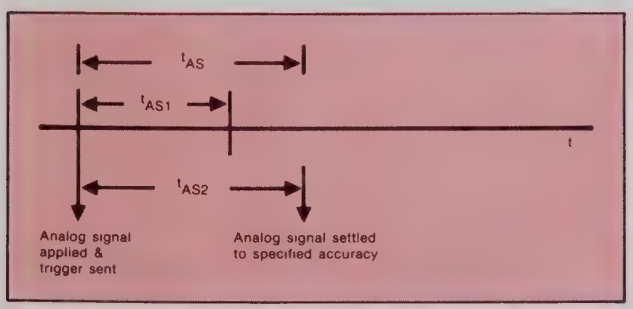

t_{AS} =

MAX (t_{AS1}), t_{AS2})

t_{AS1} =

Filter settle timeout (programmable as F2, F3 modes)

= 0 filter timeout disabled (F, F0, F1 modes)
= 0 filter bypass
50 ms fast filter, filter timeout enabled (F3 mode)
500 ms slow filters, filter timeout enabled (F2 mode)

t_{AS2} =

Filter Mode	Step Input to 0.01% of Change	Step Input to 0.001% of Change
Bypassed <100k Source Resistance	2 ms	20 ms
Filter Out (Fast)	40 ms	50 ms
Filter In (Slow)	400 ms	500 ms

The above table indicates the time required for the filter output to settle the given accuracy.

The t_{AS2} delay must be provided by the user if desired.

TRIGGER PROCESSING TIME, t_P

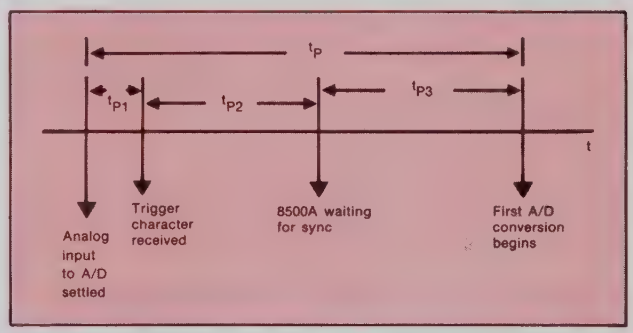

t_{P1} =

Function of user timing (may be negative in order to overlap settling with 'trigger processing time'). Thus T_P may range from minus min (t_{AS}, t_{P2}) to as large as the user desired.

t_{P2} =

Trigger processing time from the time the trigger character is received to the time the 8500A begins waiting for line synchronous interrupt. T_{P2} is dependent on the I/O interface that is installed.

I/O Interface:

Duplex Register:
Hi-Speed Mode: 0.089-097 ms
Continuous Mode: 0.466 ms
Triggered Mode: 1.121-1.138 ms, 8-bit and 1.422-1.442 ms, 16-bit*

IEEE-488:

Continuous Mode: 0.466 ms
Triggered Mode: 1.131 to 1.150 ms

Bit Serial: (no echo, i.e. YO Mode)

Continuous Mode: .466 msec
Triggered Mode: 1.100 to 1.118

t_{P3} =

Time for which the 8500A is waiting for line synchronization.

0.000 ms, non-line synchronous mode
0.600-4.767 ms, line synchronous mode (60 Hz)
0.600-5.600 ms, line synchronous mode (50 Hz)

* *Assumes '?' in upper byte, null in lower byte.*

A/D CONVERSION TIME, T_{AD}

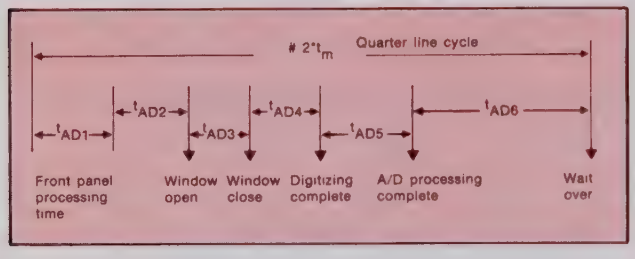

t_{AD} =

$(n*t_{ADC})$ - t_{AD6}; where n = number of samples

t_{ADC} =

$t_{AD} + t_{AD2} + t_{AD3} + t_{AD4} + t_{AD5} + t_{AD6}$

t_{AD} =

Front panel display update and switch reading time

0 μs for line asynchronous
85 μs for line synchronous without display
250 μs for line synchronous with display

t_{AD2} =

20-23 μs beginning of A/D conversion to opening of analog sample window

t_{AD3} =

337-358 μs window open to close and remainder latched in A/D converter

t_{AD4} =

823-903 μs remaining digitizing time

t_{AD5} =

A/D processing completion:
318 μs line asynchronous without autoranging
457 μs line asynchronous with autoranging
48 μs line synchronous

t_{AD6} =

0 for line asynchronous
$2*t_m$ - ($t_{AD1} + t_{AD2} + t_{AD3} + t_{AD4} + t_{AD5} +$) for line synchronous # where t_m = 2.083 ms at 60 Hz)(i.e. 1/[8*line frequency)]

NUMERIC MODIFICATION AND CONVERSION TIME, t_N

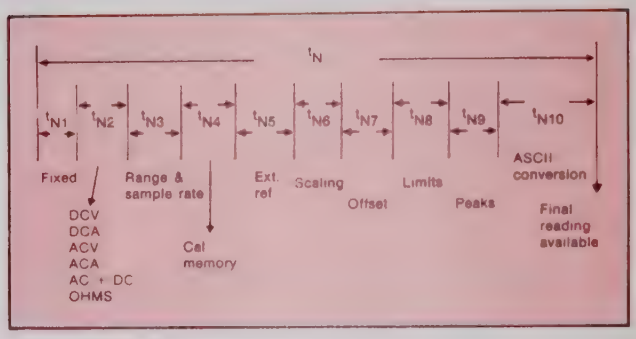

Definition of Times

$t_N = (t_{N1} + t_{N2} + t_{N3} + t_{N4} + t_{N5} + t_{N6} + t_{N7} + t_{N8} + t_{N9} + t_{N10})*fsync$

t_{N1} =

Fixed overhead for any reading 1.47 ms

t_{N2} =

Function type computation time

DCV	0.93 ms	
DCA	0.15 ms	
ACV	0.03 ms	
ACA	0.03 ms	
AC + DC	5.19 ms	
FASTOHMS	6.13 ms	
OHMS	50 Hz	60 Hz
Range 6 & 7	74.5	67.0 ms
Range 0 to 5	120.0	106.2 ms
In autoranging add	0.6	0.6 ms
If not in external reference		
for filter timeouts	50 Hz	60 Hz
Slow	605.0	504.2 ms
Fast	65.0	54.2 ms
Bypass	15.0	12.8 ms

t_{N3}f1 =

Range and sample rate adjustments
a) if in sample rate, S0 to S7 use value from table N1

b) if in sample rate, H0 to H9
$t_{N3} = 0.64 + 0.16*n + z$ ms;
where 2_{N+7} = sample rate (i.e., H2 = sample rate 2^{10}, therefore n = 3) and where z = value from table N1 for sample rate 7 by appropriate range

c) if in dc V range 3 or 4 add 0.83 ms

t_{N4} =

Calibration Memory

if not installed	0.00 ms
if correction inhibited	0.52 ms
if no correction is stored	1.51 ms
if correction stored	5.82 ms

t_{N5} =

External Reference Mode

Filter	50 Hz	60 Hz
Slow	762.9	642.0 ms
Fast	222.9	192.0
Bypass	172.6	150.0 ms

t_{N6} =

Scaling Mode 5.20 ms

t_{N7} =

Offset Mode 0.85 ms
if in ACV or DCV 1.47 ms

t_{N8} =

Limits Mode 0.43 ms
if in ohms 43.2 ms

t_{N9} =

Peaks Mode 0.54 ms

t_{N10} =

ASCII Conversion 6.10 ms

fsync =

Line synchronous interrupt processing time factor
1.01 line asynchronous mode
1.36 line synchronous mode

Table N1

		SAMPLE RATE							
	RANGE	0	1	2	3	4	5	6	7
DCA, DCV ACA, ACV	0	0.28	0.41	0.54	0.67	0.80	0 93	1 06	1 19
	1	0.15	0.01	0.15	0.28	0 41	0.54	0.67	0.80
	2	0.55	0.42	0 29	0 15	0 01	0 15	0 28	0 41
	3	0.95	0.80	0 68	0 55	0.42	0.29	0 15	0 01
	4	1.34	1.21	1 08	0 95	0 80	0 68	0 55	0 42
OHMS	0	0.01	0.15	0 28	0.41	0 54	0 67	0 80	0 93
	1, 2, 3, 4	0.42	0.29	0.15	0 01	0 15	0 28	0 41	0 54
	5, 6, 7	0.80	0.68	0.55	0.42	0.29	0 15	0 01	0 15
All times in ms									

OUTPUT READING TIME, To

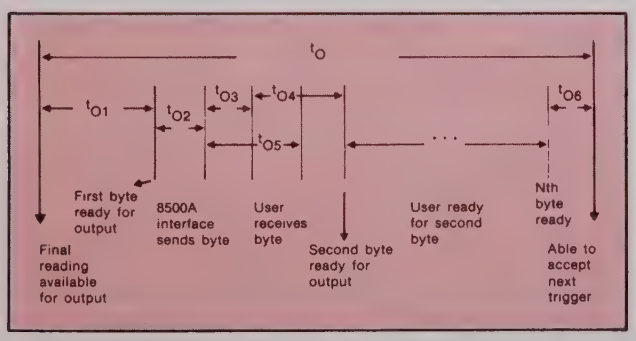

t0 =

$t_{01} + (t_{02} + Mac\ (t_{03} + t_{05}))*N + t_{06}$

t01 =

Output routine initialization time

t_{02} =

Time to load and send data byte (2 bytes if 16-bit duplex register mode)

t_{03} =

Hardware interface byte transmission time

t_{04} =

Data byte acceptance time (user configuration dependents)

t_{05} =

Time to prepare next byte for transmission

t_{06} =

Time from transmission of last byte till 8500A able to accept next trigger.

N =

Total number of bytes output (or number of 2 byte transfers for 16-bit duplex register)

t_{01} =

0.187 ms ASCII
0.075 ms Binary
0.083 ms Limits – ASCII
0.080 ms Limits – Binary

t_{02} =

0.179 ms (IEEE-488)
0.078 ms (Duplex Register – 8 bit)
0.156 ms (Duplex Register – 16 bit)
0.085 ms (Bit Serial)

t_{03} =

0.032 ms (IEEE-488)
0.017 ms (Duplex Register)
$1.0 \times 10^4 \div b$ ms (Bit Serial) Where b = baud rate (e.g., 9600) with 1 stop bit
$1.1 \times 10^4/b$ ms (Bit Serial) Where b = baud rate (e.g., 110) with 2 stop bits

t_{05} =

0.300 ms ASCII (worst case)
0.035 ms Binary
0.035 ms Limits

t_{06} =

0.200 ms (worst case)

N =

1 Limits-Binary (1 for 16-bit mode)
5 Binary (3 for 16-bit mode)
2, 3 or 4 Limits-ASCII (2 or 3 for 16-bit mode)
13 or 14 ASCII (7 for 16-bit mode)

SAMPLE COMPUTATIONS

The following examples are sample calculations used to illustrate the steps necessary to determine the total time required to take a single triggered reading. That is from the time a trigger is sent till the next trigger can be sent. The end result of each calculation will be $1/_tT$ (i.e. the number of readings per second).

A few assumptions have been made and need explanation. The analog settling time ($_tAS$) is considered to be zero, since except in ohms or external reference (or in systems where the user switches from one source to another). The signal is constantly applied to the filter and so is completely settled during the powering on period. Those times which are user dependent will be taken as zero, however in reality they can be quite significant. The time '$_tP1$' is the time the user's system takes to generate and send the trigger character (for time critical applications it can be overlapped with the analog settling time). The time '$_t04$' is the time the user's system takes to receive and process the next byte. In terms of degrading the maximum number of readings per second the 8500A will be able to transmit '$_t04$' can be significant.

One further statement should also be made. Some of the timing data is very precise (particularly the A/D time), but especially for the numeric conversion and display time. The worst case has always been taken, so it is highly likely that the user will see some small increase in speed for a particular application over the times calculated from this paper.

DCV

1.3V on input, range 2, sample/rate SØ, limits mode, ASCII output to BIT SERIAL at 2400 baud, single trigger, line asynchronous

t_T =
$t_{AS} + t_P + t_{AD} + t_N + t_O$

t_{AS} =
O

t_P =
0.00 + 1.118 + 0.00 = 1.118 ms

t_{AD} =
1*(0.00 + 0.023 + 0.358 + 0.903 + 0.318) -0.0 = 1.60 ms

t_N =
(1.47 + 0.93 + 0.55 + 0.00 + 0.00 + 0.00 + 0.00 + 0.43 + 0.00 + 6.10)*1.01 = 9.57 ms

t_O =
0.187 + [0.085 + max (1.1 x 10^4/2400 + 0.00, 0.30)]*14 + 0.200 = 64.64 ms

t_T =
76.99 ms

$1/t_T$ =
13 readings per second

DCV

300 mV on input, range 0, sample/rate SØ, filter bypass, ASCII output to BIT SERIAL module at 9600 baud, single trigger, line asynchronous

t_T =
$t_{AS} + t_P + t_{AD} + t_N + t_O$

t_{AS} =
O

t_P =
0.00 + 1.118 + 0 = 1.118

t_{AD} =
1*(0.00 + 0.023 + 0.358 + 0.903 + 0.318) -0.0 = 1.60

t_N =
(1.47 + 0.93 + 0.28 + 0.00 + 0.00 + 0.00 + 0.00 + 0.00 + 0.00 + 6.10)*1.01 = 8.87 ms

t_O =
0.187 + [0.085 + max (1.1*10^4/9600 + 0.00, 0.300)]*14 + 0.200 = 17.62

t_T =
29.21 ms

$1/t_T$ =
34 readings per second

DCV

1.00000V input, range 2, sample/rate SØ, filter bypass, binary output to IEEE-488 I/F single trigger, line asynchronous, no other modifiers

t_T =
$t_{AS} + t_P + t_{AD} + t_N + t_O$

t_{AS} =
O

t_P =
0 + 1.15 ms + 0 = 1.15

t_{AD} =
1*(0.00 + 0.023 + 0.358 + 0.903 + 0.318) -0.0 = 1.60

t_N =
(1.47 + 0.93 + 0.55 + 0.00 + 0.00 + 0.00 + 0.00 + 0.00 + 0.00 + 0.00)*1.01 = 2.98 ms

t_O =
0.075 + [0.179 + max (0.032 + 0.000, 0.035)]*5 + 0.200 = 1.35 ms

t_T =
7.08 ms

$1/t_T$ =
141 readings per second

Ohms

10 kΩ on input, range 4, sample/rate S2, filter bypass, ASCII output to IEEE-488 I/F, single trigger, line synchronous

t_T =
$t_{AS} + t_P + t_{AD} + t_N + t_O$

t_{AS} =
O

t_P =
0.00 + 1.15 + 4.77 = 5.92 ms

t_{AD} =
4*(0.250 + 0.023 + 0.358 + 0.903 + 0.048 + 2.585) - 2.585 = 14.080 ms

t_N =
(1.47 + 67.0 + 39.2 + 12.4 + 12.4 + 0.15 + 6.10)*1.36= 171.80 ms

t_O =
0.187 + [0.179 + max (0.32 + 0.0, 0.300)]*14 + 0.200 = 7.09 ms

t_T =
198.9 ms

$1/t_T$ =
5 readings per second

Auto Ranging

When the 8500A is in the auto ranging mode and for any reason the reading becomes greater than the maximum value for a given range or less than 3/32 of the maximum value for that range (excpet in the lowest range) range changing will occur. If the reading value is within the above limits this section can be ignored, otherwise the total time the 8500A will take to obtain a valid reading and output it can be computed from the following data.

Then time 't_{TOTAL}' then is; $t_{TOTAL} = t_{AR} + t_T$
t_{AR} =
$t_{AR1} + (2_n + 3)*t_m + t_{FT} + t_{U/D} *z$

n =
number of samples per reading

t_m =
time to take one sample
4.167 ms line synchronous - 60 Hz
5.000 ms line synchronous - 50 Hz
1.741 ms line asynchronous

t_{FT} =
filter timeout for both line synchronous & line asynchronous

60 Hz	50 Hz
210.5 ms	252.5 ms slow
22.9 ms	27.5 ms fast
12.5 ms	15.0 ms bypass

$t_{U/D}$ =
time to uprange (or downrange) from upranging and downranging chart

z =
number of range changes

t_{AR1} =
0.36 ms fixed overhead

Upranging And Downranging

All times in ms.

		60 Hz	50 Hz
ACV	0.27+	108.44	130.11
ACA	0.19		
DCV	0.39+	27.08	32.50
DCA	0.32		
OHMS			
Range 6 and 7 line synchronous	14.03+	75.00	90.00
line asynchronous	14.03+	68.74	78.74
Range 0 to 5 line synchronous	15.51+	137.50	165.00
Line asynchronous	15.51+	124.98	142.48
Add for filter			
Slow		504.17	605.00
Timeouts			
Fast		54.17	65.00
Bypass		12.50	15.00

NOTE

In line asynchronous mode samples are taken asynchronous but filter timeouts are still taken synchronous to the line frequency.

The maximum value for each function and for each range is the following.

FUNCTION	RANGE	MAXIMUM VALUE
DCV	0	312.5 mV
	1	2.5V
	2	20V
	3	160V
	4	1200V
ACV	1	2.5V
	2	20V
	3	160V
	4	1000V
DCA & ACA	0	312.5 μA
	1	2.5 mA
	2	20 mA
	3	160 mA
	4	1.28A
OHMS	0	31.25Ω
	1	250Ω
	2	2 kΩ
	3	32 kΩ
	4	256 kΩ
	5	4.096 MΩ
	6	32.768 MΩ
	7	262.144 MΩ

EXTERNAL TRIGGER

PART 6

The 8502A has the capability of being externally triggered with or without a remote interface. To get into the External Trigger mode the trigger button on the front panel can be activated or a remote device can command the 8502A to go into External Trigger mode. When External Trigger is enabled, each trigger input causes the 8502A to take readings and either interrupt or transmit when completed. The trigger in effect replaces the "?" software command. (See Section 1 on programming External Trigger.)

The trigger input is brought into the 8502A via a BNC connector on the Rear Panel. The outside of the BNC is at interface common. There should be no more than 10V between the outer connector and earth ground.

Either positive or negative trigger pulses may be accepted although factory wiring is for negative triggers. (To change see Section 608A of the 8502A Manual.) Input levels are wired for 4.3V (min. high) and 0.7V (max. low) and pulse duration should be greater than 10 μsec.

The time between trigger edge and first A/D conversion (not including filter timeouts or programmed delays) is as follows.

1.	Line Synchronous Mode	1 to 6 msec
2.	Asynchronous Mode	.8 to .9 msec
3.	High Speed Mode (option -05 or -07 installed)	114 ± .5 μsec

Another External Trigger will not be accepted until processing of the previous reading has been completed. This time depends on samples/reading, delays, timeouts, etc. as expressed earlier in this section.

REAR ANALOG INPUT

PART 7

Analog Connections Using Option -16 or -17

The 8500A with Option -17 or the 8502A with Option -16 or -17 allows the user to connect Analog Signal Inputs to the rear panel of the DVMs.

The Option -17 is Parallel Input to the Front Panel Binding Posts while the Option -16 (8502A only) allows Front/Rear Switched Inputs by manual operation from the Front Panel.

Connections:

Pin #	Signal
A	Guard
B	Source Low
D	Chassis
E	Input Low
K	Ext Ref Hi
L	Ext Ref Lo
R	Ohms Guard
S	Input Hi
X	Source Hi

Mating Connector*:
ELCO # 00-8016-020-000-703/Fluke # 369213
Connector Pins*:
Solder: ELCO # 217-60-8017-05-13/Fluke # 369298
Wirewrap: ELCO # 218-60-8017-13/Fluke # 369272
Crimp: ELCO # 000-60-8017-03-13/Fluke # 369280

**Included with -16 or -17 Options*

APPENDIX A

APPENDICES

HIGH SPEED READING MODES

At 500 readings/second, most of the numeric processing done by the 8500A/8502A must be dropped. The use of the high speed mode would be appropriate in the following system environments.

1. Systems with a very fast processor which can implement any necessary conversions in real time.
2. Storage of readings very quickly in real time and delaying numeric conversions until after a certain number of readings have been accumulated.
3. Applications that require no direct numeric conversions such as counting the number of zero crossings of an input signal or tallying large deviations from a nominal value.

Data will always be in the three byte (binary two's complement notation) format. The first byte of data contains an implied binary point at its midpoint and implied scale factor of 10. The first byte also contains the sign and error bits.

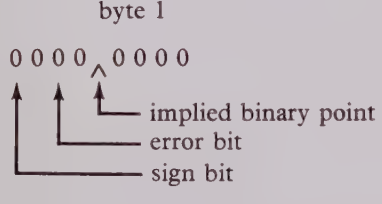

If the sign bit is equal to "1" then the reading is negative and then all three bytes must be complemented (2's complemented) before conversion. If the error bit is equal to the complement of the sign bit then an error has occured. This is easy to varify since the conversion of the three bytes equals 20 (+ or −) or greater then there is an error.

The second and third bytes have no unique significance.

byte 2
00000000
byte 3
00000000

Examples

0001 0100 (^) 00000000 00000000

1.25 + 0 + 0

Reading (RAD) = 1.25 • 10 = 12.5V

1111 0111 (^) 10111111 11111111

Sign bit =1 Form 2's complement

0000 1000 (^) 0100000 00000001

−(0.5 + 0.015625 + 0.000001)

Reading (RAD) = −0.515626 • 10

−5.15626 V

1101 1111 (^) 11111111 11111111

−(2.0 + 0 + 0.000001)

Reading (RAD) = −2.0 . 10 = −20V

ERROR Condition

The 16 bit format for a HI-SPEED reading is

BYTE 1	BYTE 2
—	BYTE 3

Note

It is not possible to make range, function, control, memory or modifier changes while in this mode, nor are any modifier modes applied to the reading; i.e., offset, V dc zero, cal memory factors, scaling, etc. are ignored.

The hi-speed mode may be aborted at any time by transmitting any character other than a "?" for a trigger. The character sent will be ignored, however, it will cause the instrument to leave the hi-speed mode.

DC Volts

To obtain the true reading for DC Voltage the RAD value must be multiplied by a scale factor for the range of the instrument.

True Reading (RT) = RAD • Scale

Table A-1

Range	Scale
R0 (100 mV)	1/64
R1 (1V)	1/8
R2 (10V)	1
R3 (100V)	8
R4 (1000V)	64

For the above examples

RAD = 1.25V & 100 mV Range
RT = 1.25/64 = 0.019531V
RAD = −5.15626 & 100V Range
RT = −5.15625 • 8 = −41.2501V

AC Volts

To obtain the true reading for AC Voltages the VAD value must be multiplied by a scale factor for the range of the measurement.

True Reading R_T = | RAD | x Scale

Table A-2

Range	Scale
R1 (1V)	1/8
R2 (10V)	1
R3 (100V)	8
R4 (1000V)	64

DC Current

True Reading R_T = −RAD • Scale where Scale and the units of R_T are given in Table A-2 for each range.

Table A-3

Range	Scale	Units
R0 (100 μA)	1/64	mA
R1 (1 mA)	1/8	mA
R2 (10 mA)	1	mA
R3 (100 mA)	8	mA
R4 (1A)	64	mA

AC Current

True Reading R_T = | RAD | • Scale where Scale and the units of R_T are given in Table A-3.

Ohms

Ohms in the hi-speed mode is the most complex function to convert to a final form. In normal ohms, three voltages are measured to compute the final unknown resistor value. In fast ohms mode, only the primary voltage across the unknown resistor is measured and the 8500A/8502A does the necessary computation to convert this voltage to the resistor value. For hi-speed ohms this computation must be done by the user. The method of determining the conversion factor is as follows:

1. Place a reference resistor, R_c, on the input terminal that is at least 30% of full scale value for the range of interest.

2. Program the command string "Z1F1R?" to obtain the resistor value or force a range (e.g., for the 1 MΩ range program the string "Z1F1R5?"). One reading must be taken in the fast ohms mode in order to correctly enter the high speed ohms mode.

3. The response of the 8500A/8502A will be to return a numeric value for R_c in ASCII format or five byte binary format.

4. Program a "!" to begin the hi-speed mode.

5. The 8500A/8502A will return, in three byte binary (two's complement) form, a number V_c corresponding to the voltage drop across the resistor R_c.

6. Subsequent unknown resistors can be measured by programming a "?" or TTL trigger to the 8502A. The resultant three byte reading will be V_x in the following formula:

$$R = (R_c / |V_c|) \cdot |V_x|$$

where

R = Unknown resistor
R_c = Reference resistor
V_x = Voltage across R
V_c = Voltage across R_c

The following table gives some typical values for each of $R_c \div |V_c|$.

Table A-4

Range	R_c V_c (typ.)
R0 (10Ω)	1.69 Ω/V
R1 (100Ω)	13.5 Ω/V
R2 (1 kΩ)	0.87 kΩ/V
R3 (10 kΩ)	1.73 kΩ/V
R4 (100 kΩ)	111.3 kΩ/V
R5 (1 MΩ)	0.22 MΩ/V
R6 (10 MΩ)	14.3 MΩ/V
R7 (100 MΩ)	114.0 MΩ/V

EXAMPLE
Initial Setup
Range 5 (1 MΩ range) with a 1.53 MΩ resistor on the inputs.

Step 3 yeilds a 1.530000E + 6 for value of R_c.

Step 5 yields the following three byte binary value for V_c. The first byte of data contains the implied binary point at its mid position.

byte 1	byte 2	byte 3
111 0101	00000000	00000000
^		
sign bit = 1	form 2's complement	

000 1011	00000000	00000000
^		
0.6875	0	0

$|V_c| = |-0.6875 \cdot 10| = 6.875$

$R_c/V_c = 1.53E6/6.875 =$

0.222545 MΩ/V

Step 6 yields following:

1111 1111	11000000	00000000
^		
sign bit = 1	form 2's complement	

$$\underbrace{0000\,0000}_{0} \qquad \underbrace{0100000}_{.015625} \qquad \underbrace{00000000}_{0}$$

$|V_x| = |-0.015625 \cdot 10| = 0.15625$

$R = (R_c/V_c) \cdot V_x$

$R = 0.222454 \cdot 0.15265 =$

$0.034773\ M\Omega$

APPENDIX B

TOGGLE MODE

When programming the 8500A/8502A Duplex Parallel Interface, it is important to note that in a "reset" state or immediately after power is applied, the interface is set to accept and output single byte ASCII characters. In order to communicate with the 8500A/8502A using 16 bit binary or ASCII characters the operator must select the desired format. Since the duplex parallel loads the character into the interface when the data is loaded onto the "Control IN" lines, the programmer is not required to place characters in the most significant byte until such time that the interface is programmed to 16-bit mode. Following are some examples:

1. From 8-bit ASCII to 16-bit ASCII using a 16-bit program.

MSB	LSB
—	/

— don't care

2. From 8-bit ASCII to 16-bit binary using a 16-bit program.

MSB	LSB
—	B
—	1
—	,

or

MSB	LSB
	/
B	1
(space)	,

3. From 8-bit ASCII to 16-bit ASCII using an 8-bit program.

LSB
/

LSB
B
2
,

NOTE: 8 bits "in" means 8 bits "out" and 16 bits "in" means 16 bits "out".

APPENDIX C

% Error Measurement

With the use of scaling and offset the 8500 Series DMM can be used to display a % error measurement.

The typical % error calculation is

$$\%\ \text{Error} = \frac{\text{Value-Reference}}{\text{Reference}} \cdot 100$$

This can be converted to

$$\%\ \text{Error} = \frac{\text{Value}}{.01 \cdot \text{Reference}} - 100$$

Voltage Stimulus

For voltage stimulus the above formula will give a direct reading in % form the 8500A or 8502A.

Measurement Sequence

Step 1. Measure reference voltage

Step 2. Program 1/100 of reference as a scaling factor.

Step 3. Program an offset value of +100.

Step 4. Activate scaling and offset

Step 5. Display (and remote output) indicates directly in %.

Ohms Stimulus

For ohms stimulus there is a difference between the 8500A and the 8502A due to the 8502A's dynamic range. The above formula and measurement sequence (for voltage stimulus) will work for an 8502A only. For the 8500A the factors must be modified per the following table and then the 8500A ohms measurement sequence can be followed.

	WHEN PROGRAMMING		
	Ω Ranges	kΩ Ranges	MΩ Ranges
Error in %	$x10^0$	$x10^3$	$x10^6$
Reference Resistor	in Ω	in kΩ	in MΩ
Offset Value	100	100E3	100E6

Comments

1. The error in % will be displayed directly on the front panel (the exponent display should be ignored when using the kΩ and MΩ ranges). When using the remote display, the exponent must be handled in software.

2. The reference resistor is first measured, then its value, in the proper units, is multiplied by 0.01 and then programmed as the scaling factor (a standard value may be used in place of the measured value).

Measurement Sequence

Step 1. Measure reference resistor

Step 2. Program 1/100 of reference resistance (may be value obtained in step 1 or numeric value) as scaling factor.

Step 3. Program offset value

Step 4. Activate offset and scaling

Step 5. Connect unknown resistor and take measurement.

Current Stimulus

For current stimulus there is a difference between the 8500A and the 8502A due to the 8502A's dynamic range. The above formula and measurement sequence (for voltage stimulus) will work for an 8502A only. For the 8500A the factors must be modified per the following table and then the 8500A current measurement sequence can be followed.

	WHEN PROGRAMMING		
	A Ranges	mA Ranges	μA Ranges
Error in %	$x10^0$	$x10^3$	$x10^6$
Reference current	in A	in mA	in μA
Offset Value	100	$100E^{-3}$	$100E^{-6}$

Comments

1. The error in % will be displayed directly on the front panel (the exponent display should be ignored when using the mA and μA ranges). When using the remote display, the exponent must be handled in software.

2. The reference current is first measured, then its value, in the proper units, is multiplied by 0.01 and then programmed as the scaling factor (a standard value may be used in place of the measured value).

Measurement Sequence

Step 1. Measure reference current

Step 2. Program 1/100 of reference current (may be value obtained in step 1 or numeric value) as scaling factor.

Step 3. Program offset value

Step 4. Activate offset and scaling

Step 5. Connect unknown current and take measurement.

John Fluke Mfg. Co., Inc.
P.O. Box 43210, Mountlake Terrace, WA 98043
800-426-0361 (toll free) in most of U.S.A.
206-744-2481 other states and Canada
206-774-2398 from other countries

Fluke (Nederland) B.V.
P.O. Box 5053, Tilburg, The Netherlands
Tel. (013) 673973

Printed in U.S.A.

B0001B-03U7812

Service Bulletin

FLUKE®

SB-70

8500 Calibration Memory Battery Replacement

Purpose

The purpose of this bulletin is to describe the changes required on the MIS 4160 PCB to accommodate the new and improved Lithium Battery.

History

Early Lithium batteries while providing a stable output over a long period of time were prone to electrolyte leakage which could destroy a PCB. To prevent this occurrence the battery in the 8500A Calibration Memory Module was changed to a hermetically sealed Lithium battery. This change requires a dimensional change in the battery mounting hole.

Procedure

Remove the instrument top cover and remove the Calibration Memory Module. Remove the PCB from the module case making sure to handle the PCB in accordance with the procedures outlined in the manual insert titled STATIC AWARENESS. Now unsolder battery terminals from the pads and discard the old battery, P/N 408286. File the battery mounting slot .1 inches on each end making sure not to file into the land pattern located on the back of the PCB under the right battery pad (refer to Fig. 1). Mount the new battery, P/N 448498, and solder it to the mounting pads, then reassemble the module and install it in the instrument. It will now be necessary to insert new cal. factors following the procedure in the manual section 604, paragraph 604-7 and 604-8.

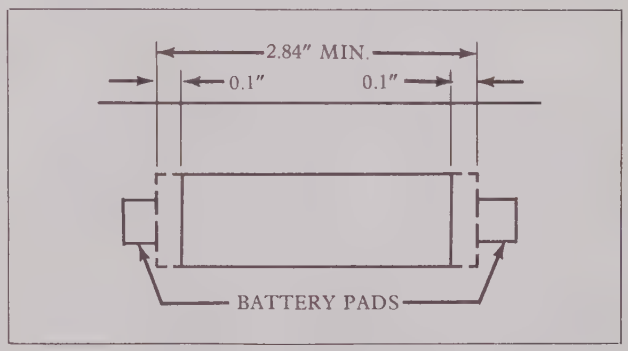

Figure 1. Component Side

FLUKE®

John Fluke Mfg. Co., Inc.
P.O. Box 43210, Mountlake Terrace, WA 98043
800-426-0361 (toll free) in most of U.S.A.
206-774-2481 from AK, HI, WA and Canada
206-774-2398 from other countries

Fluke (Nederland) B.V.
P.O. Box 5053, Tilburg, The Netherlands
Tel. (013) 673973

Litho in U.S.A.

C0070A-07U7902

troubleshooting bulletin

FLUKE

tb-10

TROUBLESHOOTING THE 8500A UTILIZING ITS MODULAR STRUCTURE

A COMPARISON OF TWO APPROACHES FOR DVM REPAIR

INTRODUCTION

With the advance of the microprocessor into the instrumentation market, products in the DMM Market, such as the 8500A and competition units, have become more complex in technology. Because of this complexity, mainly in the digital control and processing areas, these "new" DMM's have generated a concern on specifications, reliability, serviceability, and Systems application.

Two types of design format approaches seem to have been taken in these new products. One type being a bus oriented architecture such as the 8500A, the other being more a discreet line control of functions similar to older DMMs. Other manufacturer's DMMs have used off the shelf microprocessors, custom processors, and dual custom processors in a master-slave configuration, but none have used the computer architecture and modularity concept of the 8500A. The 8500A uses an off-the-shelf processor, the Intel 8080, as the heart of its controller module, while the nearest competitor uses two custom processors, available at one source, in a master-slave configuration.

COMPARISON OF PRIME USE FEATURES

What has the microprocessor meant to the analog measurement area? Use of the processor in the 8500A has given it the ability to select and average samples, provide 100 dB NMRR at line frequencies, higher range, and more accurate ohms measurements, correction factors for measurements through the Cal Memory Option, expanded techniques through remotes, error correction in A/D measurements, and autorange current measurements. The competition has provided only the correction factors for measurements and a self-test program of some analog functions.

As far as specifications, the 8500A is better than the competition in VDC, ohms, and current (which the competition doesn't offer). The only place the competition has an advantage is VAC RMS measurements while VAC averaging is similar. In remote operation the 8500A offers many varied features such as Peak Value Storage, Go/No Go Test Capability, and Limits Measurements, though not with just one remote interface, but three interfaces. The IEEE-488 I/O to interface to the HPIB, the Bit Serial I/O for RS232 and teletypes, and the Parallel I/O for computer peripherals and custom designed interfaces while the competition offers only the I/O to the HPIB.

This should give the 8500A an advantage to customers who don't have or need the IEEE-488 bus system and strong attack in the same area as the other manufacturers because of better specifications, less down time, and a method (as will be explained later) of keeping large systems on line.

COMPARISON OF SERVICE FEATURES

The service concept of the 8500A and the other manufacturers vary greatly. The 8500A can be thought of as a computer — the controller is the Central Processor Unit and Memory, the Isolator as a Transparent Control Buffer, and all other modules as peripheral devices that are addressed and handshake when data is transferred. Some modules also have interrupt capabilities similar to computer device I/O's for immediate responses. Because of structuring the software and over-ride capability with the Cal Switch, the modules function independently. This provides easy isolation of faulty modules in case of failure. With spare modules this allows the 8500A to be brought back on line in a matter of minutes.

The other manufacturers offer a Digital Self-Test feature built into the software program with circuit area isolation. This self-test feature is only available through the use of an external analyzer and the digital portion can only be repaired by conventional means if the documentation existed to accomplish this. Another area to consider on any software self-test is the effectiveness of the program to perform full checkout of every I.C. Node. A full method of self-testing to a 95% probability level requires approximately 4 self-test steps for every opera-

tional step to detect single bit node errors. When this drops to a level of one self-test step per one operational step, the probability of error detection drops to about 70% probability. If the detection is not just single bit error or hard fail, the probability would rise to about 83%. This is for single node detection and not the particular I.C. that has failed if the node has any fan out except one. With a 1k byte program, the effectiveness of this would be about 85% leaving some 15% of the digital problems unsolvable or not noticeable.

The competitor's Analog Self-test consists of special switching circuits to route the internal voltage reference or ground to different portions of the analog circuits. These are then read and compared to limits stored in memory. These are helpful provided two things happen within the unit. First, the self-test circuitry must be working and secondly, the self-test circuit must not interfere with normal measurement. The switching components being shorted or leaky could allow self-test to work but not the normal measurement circuit. This could be especially true when the unit has been stressed due to over-voltage or transients.

The 8500A offers independent module isolation to find within a very short period of time the module causing the failure. Because of structuring the software program, the addressable handshaking bus architecture, and module refresh cycles, the 8500A has a definite transfer pattern to all the modules except the interrupt driven remotes. With an external control device driving the 8500A in either a continuous or trigger loops, these modules provide a continuous data and address pattern to and from the controller module, thus providing again a known service aid.

For servicing the 8500A, this can either be done at Fluke Service Centers or by the customer. The service centers will provide automated board testing on all digital modules, test bed repair of analog modules, and verification of remote operation. These can be accomplished whether the complete 8500A or just a single module has been returned for repair. If a customer has spare modules, he can bring the 8500A back on line and then return the module for repair. This can be extremely valuable to the Systems customer because the 8500A does not have to be removed from the system to initiate repair and bring the system back on line.

The customer can also do repair of the 8500A through use of module isolation and module repair guides either at a central location or by conventional methods without removing the 8500A from the system.

To do effective troubleshooting of other manufacturers units, almost all problems require shutting down a system to do any repairs. There are few problems that can be repaired with the unit still in the system, thus bringing about longer down time when compared to the 8500A. This is mainly due to the ease of T/S a modular unit to a mother board type.

Table 1.

THE 8500A OFFERS THE FOLLOWING FEATURES	
Excellent specifications	Refer to Spec Sheet
Three types of remotes	IEEE-488, Bit Serial, 8 or 16 Bit Character Parallel
Bus Architecture	Definitive transfer of data & functions
Functional Modularity	Reduction of system down time
Structured Software	Isolation of faulty modules and repair of the modules
Over-ride of missing modules (Cal Switch On)	Allows trouble-shooting of single modules with only F.P. & controller
Ease of trouble-shooting	1 1 Module Isolation Procedure 2 A. Module Repair Procedure B. Use of spare modules as replacement to reduce down-time 3 No specialized test equipment 4 Quick service center turnaround for those who don't do their own repair
Reliability	Excellent
Less Down Time	Good analog protection - Small number of relays. Majority of digital circuitry MOS - (CMOS-MNOS) off the self parts in digital and analog sections except for temperature compensated circuits and precision resistors.
THE OTHER MANUFACTURER'S OFFER THE FOLLOWING FEATURES:	
Good specifications	Less accurate than 8500A except in VAC RMS
Single type of remote	IEEE-488 only
Large Motherboard Construction	Digital & Analog Mother Boards with plug-in main controller, A/D Converter, Voltage Reference, AC, Ohms
Ease of trouble-shooting	Analog self-test for DC box only. AC-Ohm no self-test. Readouts branch to flow charts. Digital self-test if External Analyzer used and main controller PCB works. If doesn't work, replace main controller PCB.
Reliability	Good. Fair protection D.C. - Fan cooling because of high heat dissipation - Most digital circuitry low power Schottky - Custom IC's.

CONCLUSION

Both the 8500A and competitive units have some good points, but the performance, reliability, systems integrations, and servicing aspects of the "new" DMM's are definitely in the 8500A's favor.

PERFORMANCE - Better specifications

RELIABILITY - More reliable parts - Heat dissipation - No fan needed

SYSTEMS INTEGRATION - 3 types of remotes - More remote features - Faster speed - Less down time if spare module kit

BETTER SERVICING - Modularity - Quick module isolation - Functionally independent modules for repair

Most failures in any DMM lie within the analog sections due to greater stress on these areas. These probably account for 90% of all failures and for this reason, along with the fact that the competition has only the external analyzer with 85% efficiency in locating failures and no other means of troubleshooting, the edge must go to the 8500A.

The analog self-test of the competition provides no more help than the 8500A does in determining anything but hard DC failures. The 8500A, with its functionally independent modules, can provide easier determination of the harder problems such as drift, noise, and linearity testing.

Also, the 8500A is backed by the Fluke ideal of quality, reliability and service through our factory and world service organizations. With these in mind, the 8500A should prove that Fluke provides the best in DMM's to their customers.

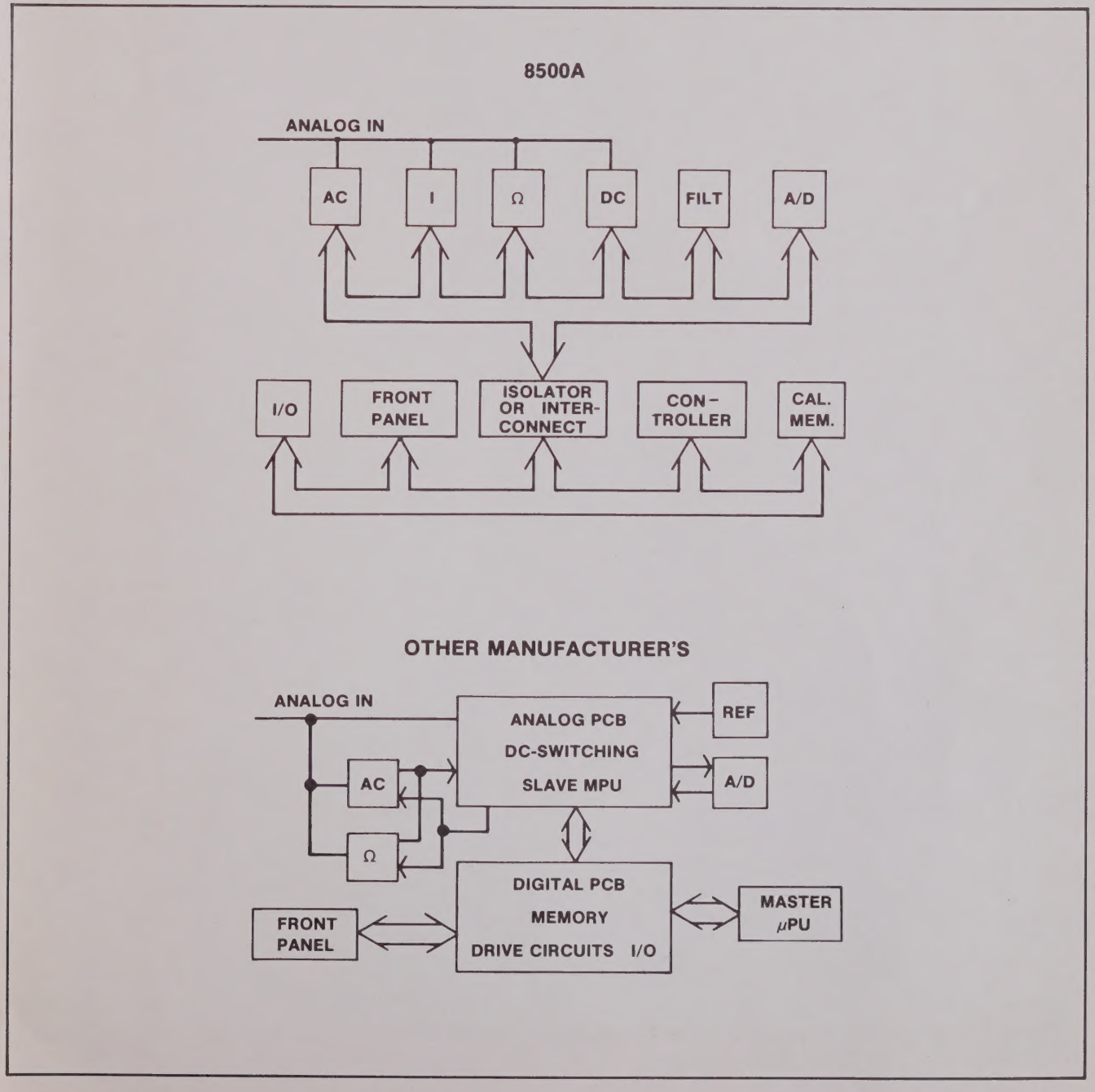

Figure 1.

John Fluke Mfg. Co., Inc., P.O. Box 43210, Mountlake Terrace, WA, 98043 Tel: (206) 774-2211
Fluke (Nederland) B.V., P.O. Box 5053, Tilburg, The Netherlands Tel: (13) 673973

D0002A-03U7710

Litho in U.S.A.

www.manualsplus.com
1036542